National Grid SA-COA
PRODUCTION FILE

Contractor	:	ABB Contracting Co.
Project	:	SS 8709- 132/13.8kV in Alkharj City
Contract No	:	11131113/00
Substation	:	8709
Subject	:	132Kv Busbar Protection Set-2 (+BBP2-5) Relay Panel-5

ABB

POWER SYSTEMS NETWORK MANAGEMENT
PROTECTION AND SUBSTATION AUTOMATION SYSTEMS
WBS NO: S-13656

ABB AUTOMATION COMPANY LTD.
414, AL-KHARJ ROAD
SECOND INDUSTRIAL CITY
RIYADH-11383 K.S.A

CONTRACTOR : ABB Contracting Company

CLIENT : National GridSA

PROJECT : CONSTRUCTION OF NEW 132/13.8kV SS 8709 IN AL-KHARJ CITY

SUBSTATION : S/S 8709

CONTRACT NO. : 11131113/00

TITLE : Assembly Drawing - +BBP2-5
[132KV BUSBAR PROTECTION MAIN-2 BAY UNIT PANEL]

REV. NO.	DATE	DESCRIPTION
01	13 49	FACTORY ASBUILT
00	13 05	FOR APPROVAL

AS-BUILT BY _____ DATE _____ | CONTRACT NO. 11131113/00 | JOB ORDER NO. S-13656

DRAWN BY RIZ CHECKED BY KVR
DATE STARTED 30.01.2013 DATE COMPLETED _____
OPRG. DEPT. CTPD ENG. DEPT. AUT-PSAC

COVER SHEET
132KV BUSBAR PROTN.MAIN-2 BU PANEL +BBP2-5
S/S 8709 - 132/13.8KV IN AL-KHARJ CITY
RIYADH SAUDI ARABIA

الشركة الوطنية لنقل الكهرباء
نقل الكهرباء
National Grid SA

INDEX	PLANT NO.	DRAWING NUMBER	SHEET NO. SHT	SHEET NO. CONT.	REV. NO.
-	C421	CD-323008	G00	G01	01

NG/D2-D (2012/01)
DMS VECTOR NGD200

THIS DRAWING AND THE INFORMATION CONTAINED HEREIN ARE THE SOLE PROPERTY OF NationalGrid SA NO REPRODUCTION IN FULL OR IN PART SHALL BE OBTAINED FROM THIS DOCUMENT WITHOUT THE WRITTEN CONSENT OF ITS OWNER.

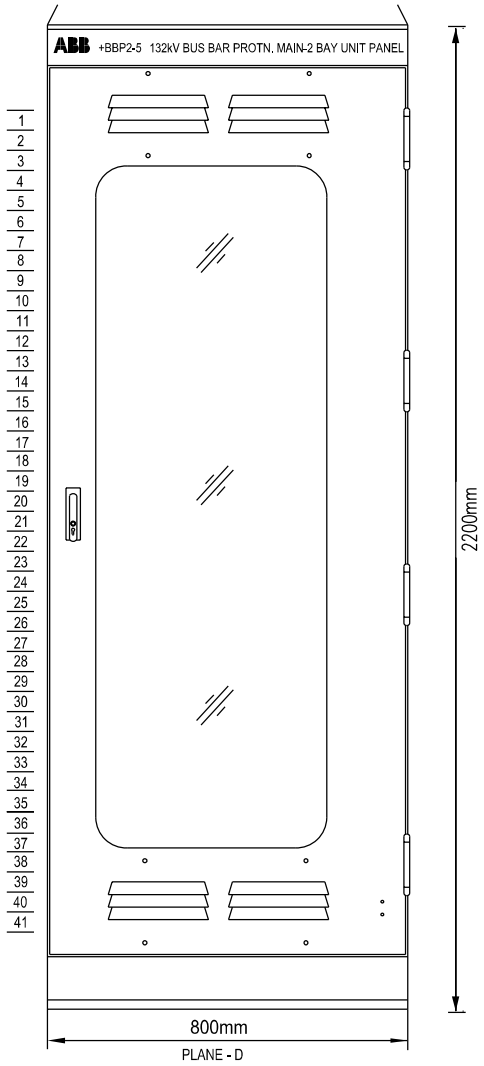

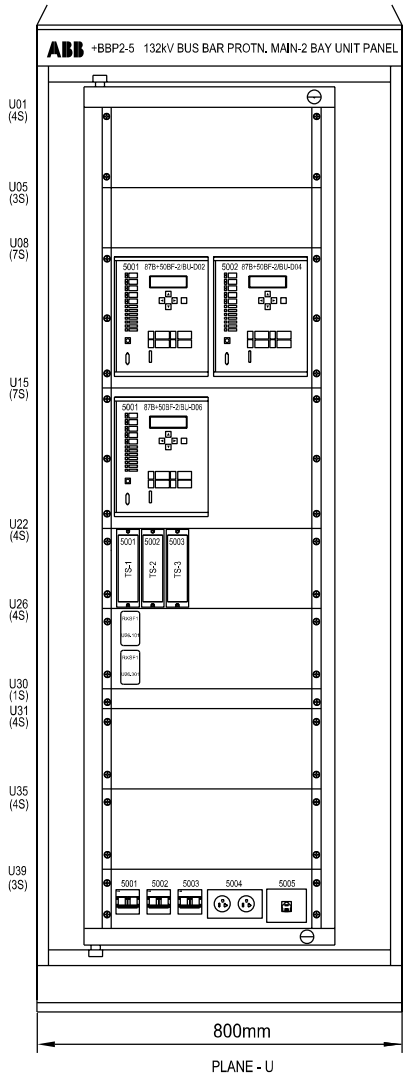

MOUNTING PLANES	
EXTERIOR COLOUR	AIRCRAFT GREY COLOUR TO SHADE NO. RAL7038
INTERIOR COLOUR	SIGNAL WHITE COLOUR TO SHADE NO. RAL9003
CUBICLE TYPE	VSH 200
FRAME	HINGED FRAME, MOVABLE
CUBICLE TYPE	FRONT ACCESS
MATERIAL OF CONSTRUCTION	ALUZINK STEEL
DIMENSIONS	2200 X 800 X 800 mm (H X W X D)
CLASS OF PROTECTION	IP 41
APPROX WEIGHT	200KG
CABLE ENTRY	BOTTOM

AS-BUILT BY _____ DATE _____ | CONTRACT NO. 11131113/00 | JOB ORDER NO. S-13656

REV. NO.	DATE	DESCRIPTION
01	13 49	FACTORY ASBUILT
00	13 05	FOR APPROVAL

DRAWN BY RIZ CHECKED BY KVR
DATE STARTED 30.01.2013 DATE COMPLETED _____
OPRG. DEPT. CTPD ENG. DEPT. AUT-PSAC

ASSEMBLY DRAWING
132KV BUSBAR PROTN.MAIN-2 BU PANEL +BBP2-5
S/S 8709 - 132/13.8KV IN AL-KHARJ CITY
RIYADH SAUDI ARABIA

الشركة الوطنية لنقل الكهرباء
نقل الكهرباء
National Grid SA

INDEX	PLANT NO.	DRAWING NUMBER	SHEET NO. SHT	SHEET NO. CONT.	REV. NO.
-	C421	CD-323008	G01	G02	01

NG/D2-D (2012/01)
DMS VECTOR NGD200

THIS DRAWING AND THE INFORMATION CONTAINED HEREIN ARE THE SOLE PROPERTY OF NationalGrid SA NO REPRODUCTION IN FULL OR IN PART SHALL BE OBTAINED FROM THIS DOCUMENT WITHOUT THE WRITTEN CONSENT OF ITS OWNER.

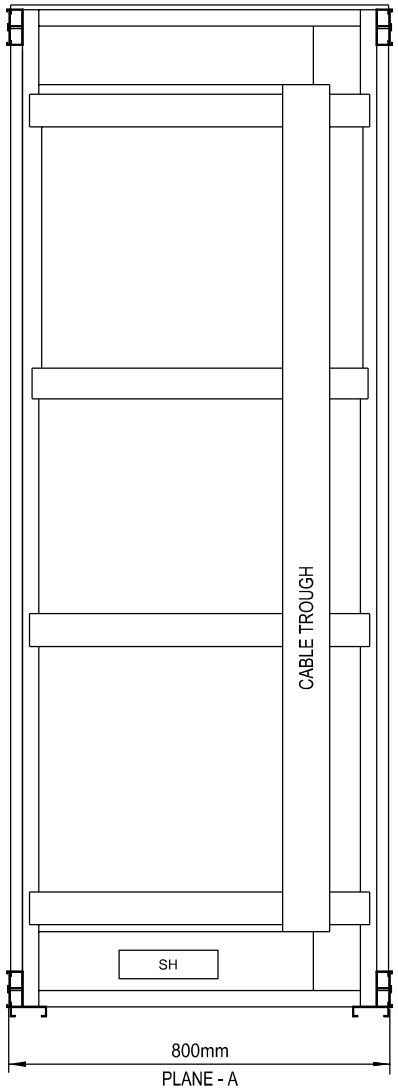

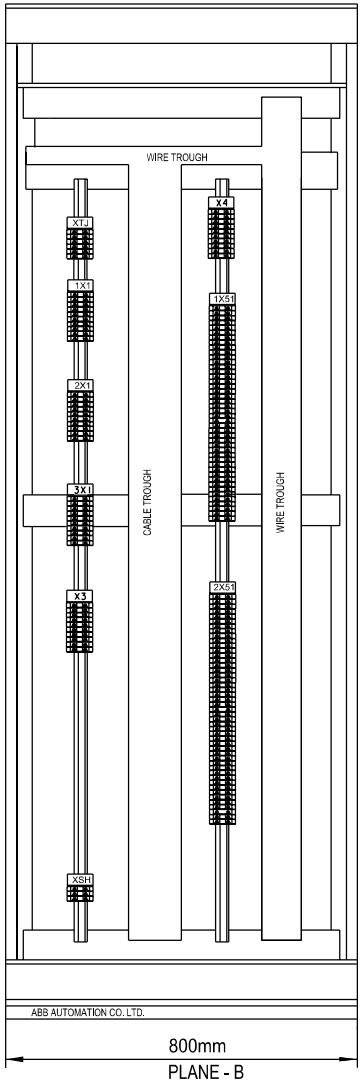

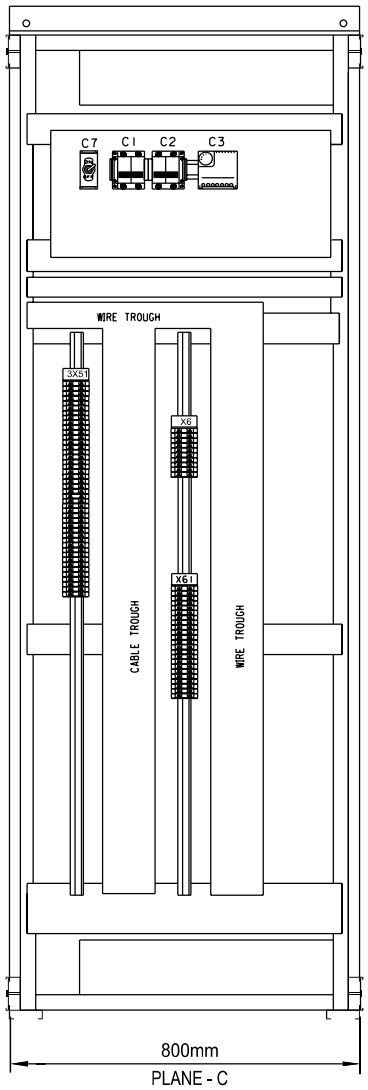

SCH.REF	DESCRIPTION	TYPE	MAKE
1X1,2X1,3X1	CT CIRCUITS	OTTA 6T P/P	PHOENIX
X3	AC INCOMING CIRCUITS	D6/8.ST1.RS	ENTRELEC
X4	DC INCOMING CIRCUITS CIRCUITS	D6/8.ST1.RS	ENTRELEC
1X51,2X51,3X51	CONTROL CIRCUITS	M6/8.RS	ENTRELEC
X61,X6	ALARM CIRCUITS	M6/8.SNB	ENTRELEC
XTJ	TELEPHONE JACK	M6/8.RS	ENTRELEC
XSH	SPACE HEATER	M6/8.RS	ENTRELEC

AS-BUILT BY _____ DATE _____ | CONTRACT NO. 11131113/00 | JOB ORDER NO. S-13656

REV. NO.	DATE	DESCRIPTION
01	13 49	FACTORY ASBUILT
00	13 05	FOR APPROVAL

DRAWN BY RIZ CHECKED BY KVR
DATE STARTED 30.01.2013 DATE COMPLETED _____
OPRG. DEPT. CTPD ENG. DEPT. AUT-PSAC

ASSEMBLY DRAWING
132KV BUSBAR PROTN.MAIN-2 BU PANEL +BBP2-5
S/S 8709 - 132/13.8KV IN AL-KHARJ CITY
RIYADH SAUDI ARABIA

الشركة الوطنية لنقل الكهرباء
نقل الكهرباء
National Grid SA

INDEX	PLANT NO.	DRAWING NUMBER	SHEET NO. SHT	SHEET NO. CONT.	REV. NO.
-	C421	CD-323008	G02	G03	01

NG/D2-D (2012/01)
DMS VECTOR NGD200

THIS DRAWING AND THE INFORMATION CONTAINED HEREIN ARE THE SOLE PROPERTY OF NationalGrid SA NO REPRODUCTION IN FULL OR IN PART SHALL BE OBTAINED FROM THIS DOCUMENT WITHOUT THE WRITTEN CONSENT OF ITS OWNER.

BASE PLATE/
FOUNDATION

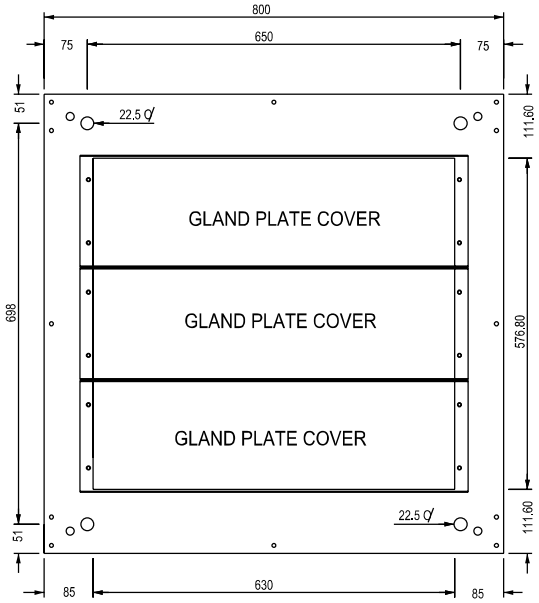

PLAN

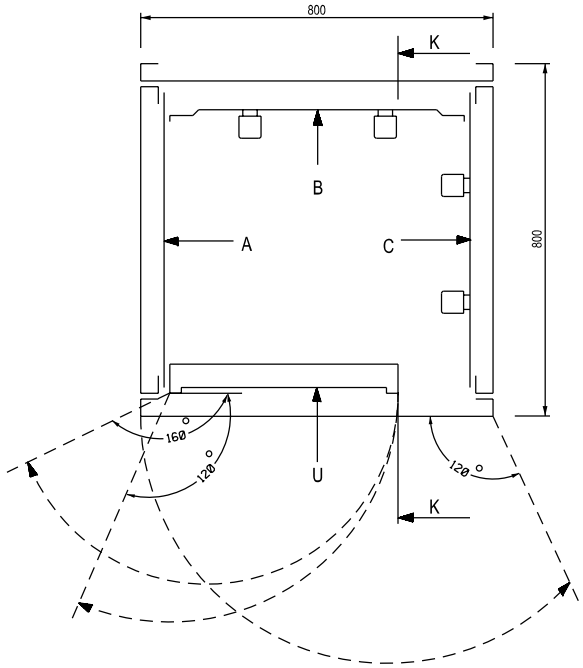

AS-BUILT BY _____ DATE _____	CONTRACT NO. 11131113/00	JOB ORDER NO. S-13656

REV. NO.	DATE	DESCRIPTION
01	13 49	FACTORY ASBUILT
00	13 05	FOR APPROVAL

DRAWN BY RIZ CHECKED BY KVR
DATE STARTED 30.01.2013 DATE COMPLETED _____
OPRG. DEPT. CTPD ENG. DEPT. AUT-PSAC

ASSEMBLY DRAWING
132KV BUSBAR PROTN.MAIN-2 BU PANEL +BBP2-5
S/S 8709 - 132/13.8KV IN AL-KHARJ CITY
RIYADH SAUDI ARABIA

الشركة الوطنية لنقل الكهرباء
نقل الكهرباء
National Grid SA

INDEX	PLANT NO.	DRAWING NUMBER	SHEET NO. SHT	SHEET NO. CONT.	REV. NO.
-	C421	CD-323008	G03	G04	01

NG/D2-D (2012/01)
DMS VECTOR NGD200

THIS DRAWING AND THE INFORMATION CONTAINED HEREIN ARE THE SOLE PROPERTY OF NationalGrid SA NO REPRODUCTION IN FULL OR IN PART SHALL BE OBTAINED FROM THIS DOCUMENT WITHOUT THE WRITTEN CONSENT OF ITS OWNER.

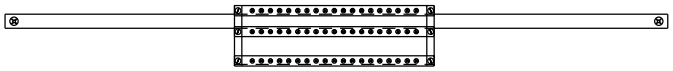

TOP VIEW FOR EARTHING BAR

U PLANE TOP LABEL

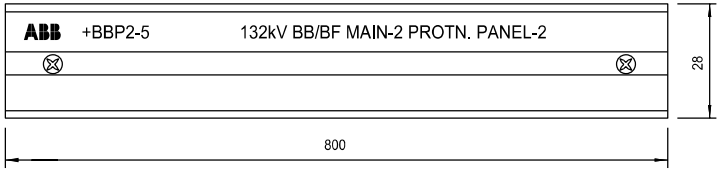

U PLANE BOTTOM LABEL

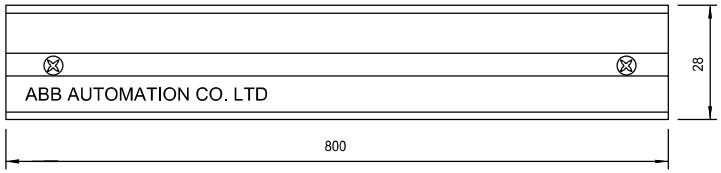

MANUFACTURING LABEL

ABB ABB Automation Co.Ltd.

PROJECT	:	National Grid SA S/S 8709
ORDER REFERENCE	:	2875 RF S13656
YEAR OF MANUFACTURE	:	2013
PANEL NO.	:	+BBP2-5
DRAWING NO.	:	S13656-CD-323009

MADE IN THE KINGDOM OF SAUDI ARABIA

REV. NO.	DATE	DESCRIPTION
01	13 49	FACTORY ASBUILT
00	13 05	FOR APPROVAL

AS-BUILT BY _____ DATE _____ | CONTRACT NO. 11131113/00 | JOB ORDER NO. S-13656

DRAWN BY RIZ CHECKED BY KVR

DATE STARTED 30.01.2013 DATE COMPLETED _____

OPRG. DEPT. CTPD ENG. DEPT. AUT-PSAC

ASSEMBLY DRAWING

132KV BUSBAR PROTN.MAIN-2 BU PANEL +BBP2-5

S/S 8709 - 132/13.8KV IN AL-KHARJ CITY

RIYADH SAUDI ARABIA

الشركة الوطنية لنقل الكهرباء

نقل الكهرباء National Grid SA

INDEX	PLANT NO.	DRAWING NUMBER	SHEET NO. SHT	SHEET NO. CONT.	REV. NO.
-	C421	CD-323008	G04	L00	01

NG/D2-D (2012/01)

DMS VECTOR NGD200

THIS DRAWING AND THE INFORMATION CONTAINED HEREIN ARE THE SOLE PROPERTY OF NationalGrid SA NO REPRODUCTION IN FULL OR IN PART SHALL BE OBTAINED FROM THIS DOCUMENT WITHOUT THE WRITTEN CONSENT OF ITS OWNER.

POWER SYSTEMS NETWORK MANAGEMENT
PROTECTION AND SUBSTATION AUTOMATION SYSTEMS
WBS NO: S-13656

ABB AUTOMATION COMPANY LTD.
414, AL-KHARJ ROAD
SECOND INDUSTRIAL CITY
RIYADH-11383 K.S.A

CONTRACTOR : ABB Contracting Company

CLIENT : National GridSA

PROJECT : CONSTRUCTION OF NEW 132/13.8kV SS 8709 IN AL-KHARJ CITY

SUBSTATION : S/S 8709

CONTRACT NO. : 11131113/00

TITLE : LIST OF APPARATUS - +BBP2-5
[132KV BUSBAR PROTECTION MAIN-2 BAY UNIT PANEL]

AS-BUILT BY _____ DATE _____ | CONTRACT NO. 11131113/00 | JOB ORDER NO. S-13656

REV. NO.	DATE	DESCRIPTION
01	13 49	FACTORY ASBUILT
00	13 05	FOR APPROVAL

DRAWN BY RIZ CHECKED BY KVR
DATE STARTED 30.01.2013 DATE COMPLETED _____
OPRG. DEPT. CTPD ENG. DEPT. AUT-PSAC

COVER SHEET
132KV BUSBAR PROTN.MAIN-2 BU PANEL +BBP2-5
S/S 8709 - 132/13.8KV IN AL-KHARJ CITY
RIYADH SAUDI ARABIA

الشركة الوطنية لنقل الكهرباء
نقل الكهرباء
National Grid SA

INDEX	PLANT NO.	DRAWING NUMBER	SHEET NO. SHT	SHEET NO. CONT.	REV. NO.
-	C421	CD-323008	L00	L01	01

NG/D2-D (2012/01)
DMS VECTOR NGD200

THIS DRAWING AND THE INFORMATION CONTAINED HEREIN ARE THE SOLE PROPERTY OF NationalGrid SA NO REPRODUCTION IN FULL OR IN PART SHALL BE OBTAINED FROM THIS DOCUMENT WITHOUT THE WRITTEN CONSENT OF ITS OWNER.

SR. NO.	GA. REF.	SCH. REF.	DESCRIPTION	SHT.	QTY.	TYPE	MAKE	ORDERING INFORMATION
			RELAY CUBICLE- +BBP2-5 FOR 132KV BB/BF MAIN-2 ACCOMODATING THE FOLLOWING		3	VSH 200	ABB	
1	U08.5001	87B+50BF-2/BU-D02	BAY UNIT FOR NUMERICAL BUSBAR PROTECTION WITH FOLLOWING	293,294		7SS523	SIEMENS	7SS5231-5CA01+1AA1-2/GG
	U08.5002	87B+50BF-2/BU-D04	HIGH TROUGH-FAULT STABILITY EVEN IN CASE OF CT SATURATION.	295,296				
	U15.5001	87B+50BF-2/BU-D06	NEUTRAL CURRENT CRITERION INSTANTANEOUS VALUES FOR FAULT RECORDING.	297,298				
			DISTURBANCE FREE AND FAST DATA TRANSFER TO & FROM CENTRAL UNIT					
			PHASE SEGRAGATED MEASUREMENT					
			REDUCE CT PERFORMANCE REQUIREMENTS					
			BUILT IN HUMAN MACHINE INTERFACE					
			BUILT IN BREAKER FAILURE FUNCTION.					
			END FAULT PROTECTION FUNCTION					
			DISTURBANCE RECORDER					
			BINARY OUTPUT : 20					
			BINARY OUTPUT : 6+2-WD					
			FULLY NUMERICAL SIGNAL PROCESSING					
			RATED CURRENT : 1A					
			AUX. VOLTAGE : 60-250V DC					
			RATED FREQUENCY : 60HZ					
2	U22.5001	TS-1	TEST SWITCH FOR 87B+50BF-2/BU-D02 RELAY	293	3	MMLG02	ALSTOM	MMLG02 R1AA 0001D
	U22.5002	TS-2	TEST SWITCH FOR 87B+50BF-2/BU-D04 RELAY	295				
	U22.5003	TS-3	TEST SWITCH FOR 87B+50BF-2/BU-D06 RELAY	297				
3	U26.101	74BF-2/BU-D02	DUAL TARGET RELAY FOR 87B+50BF-2/D02 AND 87B+50BF-2/D04 DC SUPERVISION	232	1	RXSF 1	ABB	RK 271 019-AN
		/74BF-2/BU-D04	AUXILIARY VOLTAGE : 110-125V DC	235				
			CONTACT DATA : 1NO + 2NC					
			FLAG : SELF RESET,REVERSE					
4	U26.301	74BF-2/BU-D06	DUAL TARGET RELAY FOR 87B+50BF-2/D06 DC SUPERVISION	238	1	RXSF 1	ABB	RK 271 019-AN
		/SPARE	AUXILIARY VOLTAGE : 110-125V DC					
			CONTACT DATA : 1NO + 2NC					
			FLAG : SELF RESET,REVERSE					

AS-BUILT BY _____ DATE _____ | CONTRACT NO. 11131113/00 | JOB ORDER NO. S-13656

REV. NO.	DATE	DESCRIPTION
01	13 49	FACTORY ASBUILT
00	13 05	FOR APPROVAL

DRAWN BY RIZ CHECKED BY KVR
DATE STARTED 30.01.2013 DATE COMPLETED _____
OPRG. DEPT. CTPD ENG. DEPT. AUT-PSAC

LIST OF APPARATUS
132KV BUSBAR PROTN.MAIN-2 BU PANEL +BBP2-5
S/S 8709 - 132/13.8KV IN AL-KHARJ CITY
RIYADH SAUDI ARABIA

الشركة الوطنية لنقل الكهرباء
نقل الكهرباء National Grid SA

INDEX	PLANT NO.	DRAWING NUMBER	SHEET NO. SHT	SHEET NO. CONT.	REV. NO.
-	C421	CD-323008	L01	L02	01

NG/D2-D (2012/01)
DMS VECTOR NGD200

THIS DRAWING AND THE INFORMATION CONTAINED HEREIN ARE THE SOLE PROPERTY OF NationalGrid SA NO REPRODUCTION IN FULL OR IN PART SHALL BE OBTAINED FROM THIS DOCUMENT WITHOUT THE WRITTEN CONSENT OF ITS OWNER.

SR. NO.	GA. REF.	SCH. REF.	DESCRIPTION	SHT.	QTY.	TYPE	MAKE	ORDERING INFORMATION
5			MCB 2 POLE 6A, FOR DC SUPPLY	216	3	S2-H02	ABB	GH2820164R0377
			WITH 2NC AUXILIARY CONTACT			S282UC-K6		S2C-H11L- 2CDS 200936 R0001
	U39.5001	Q1	D02 ± BF2 SUPPLY					
	U39.5002	Q2	D04 ± BF2 SUPPLY					
	U39.5003	Q3	D06 ± BF2 SUPPLY					
6		C1,C2	MINIATURE CIRCUIT BREAKER, 2 POLE, 10A FOR	211	2	S202P-K10	ABB	2CDS 252 001 R0104
			CONVENIENCE OUTLET WITH AUXILIARY SWITCH, 1NO + 1NC CONTACTS			+S2-H02		
7	U39.5004	C01	CONVENIENCE OUTLET 10A, 127V AC	211	2	USM45 & USMS45	LEGRAND	74140 & 74180
		C02	CONVENIENCE OUTLET 10A, 220V AC					
8		C3	THERMOSTAT FOR SPACE HEATER, 5-60°C	211	1	SK 3110	RITTAL	SK 3110
9	U39.5005	TJ	TELEPHONE JACK 1GANG 4WIRE	211	1	EDF410	EDISON	EDF410
10		C7	ON/OFF SWITCH FOR SPACE HEATER	211	1	M2SS1-10B	ABB	1SFA 611 200 R1006
						MCBH-10		1SFA 611 605 R1101
11		DS	DOOR SWITCH FOR CONTROL OF CUBICLE INTERNAL ILLUMINATION LAMP	211	1	LS30P	ABB	1SBV 010213 R1202
12		IL	INTERNAL ILLUMINATION CUBICLE LAMP SUITABLE FOR	211	1	T-4	SUNON	SP-20W
			127V AC, 60Hz SUPPLY, 20W					
13		SH	SPACE HEATER, 55W, 127V, 60Hz	211	1	IFZEK7580104	RICA	-

AS-BUILT BY _____ DATE _____ | CONTRACT NO. 11131113/00 | JOB ORDER NO. S-13656

REV. NO.	DATE	DESCRIPTION
01	13 49	FACTORY ASBUILT
00	13 05	FOR APPROVAL

DRAWN BY RIZ CHECKED BY KVR
DATE STARTED 30.01.2013 DATE COMPLETED _____
OPRG. DEPT. CTPD ENG. DEPT. AUT-PSAC

LIST OF APPARATUS
132KV BUSBAR PROTN.MAIN-2 BU PANEL +BBP2-5
S/S 8709 - 132/13.8KV IN AL-KHARJ CITY
RIYADH SAUDI ARABIA

الشركة الوطنية لنقل الكهرباء
نقل الكهرباء National Grid SA

INDEX	PLANT NO.	DRAWING NUMBER	SHEET NO. SHT	SHEET NO. CONT.	REV. NO.
-	C421	CD-323008	L02	L03	01

NG/D2-D (2012/01)
DMS VECTOR NGD200

THIS DRAWING AND THE INFORMATION CONTAINED HEREIN ARE THE SOLE PROPERTY OF NationalGrid SA NO REPRODUCTION IN FULL OR IN PART SHALL BE OBTAINED FROM THIS DOCUMENT WITHOUT THE WRITTEN CONSENT OF ITS OWNER.

SR. NO.	ITEM DESIGNATION	D E S C R I P T I O N	SHEET.NO.	QTY.	TYPE	MAKE	ORDERING INFORMATION
14	1X1,2X1,3X1	BOLT CONNECTING TERMINAL BLOCKS FOR DISCONNECTABLE CT CIRCUITS (10 EACH)		30	OTTA 6T P/P	PHOENIX	0790462
	X3	SPRING LOADED TERMINAL BLOCKS FOR DISCONNECTABLE AC CIRCUITS		10	D6/8.ST1.RS	ENTRELEC	1SNA 115 831 R0400
	X4	SPRING LOADED TERMINAL BLOCK FOR DISCONNECTABLE DC EXT. CIRCUITS		10	D6/8.ST1.RS	ENTRELEC	1SNA 115 831 R0400
	1X51	SPRING LOADED TERMINAL BLOCK FOR DC PROTN. CIRCUITS-BU-D02		40	M6/8.RS	ENTRELEC	1SNA 115 688 R2500
	2X51	SPRING LOADED TERMINAL BLOCK FOR DC PROTN. CIRCUITS-BU-D04	301	40	M6/8.RS	ENTRELEC	1SNA 115 688 R2500
	3X51	SPRING LOADED TERMINAL BLOCK FOR DC PROTN. CIRCUITS-BU-D06		40	M6/8.RS	ENTRELEC	1SNA 115 688 R2500
	X6	SPRING LOADED TERMINAL BLOCK FOR ALARM CIRCUITS		5	M6/8.RS	ENTRELEC	1SNA 115 688 R2500
	X61	KNIFE TYPE TERMINAL BLOCKS FOR COMMON ALARM CIRCUITS		15	M6/8.SNB	ENTRELEC	1SNA 115 685 R1200
	XTJ	SPRING LOADED TERMINAL BLOCKS FOR TELEPHONE JACK		5	M6/8.RS	ENTRELEC	1SNA 115 688 R2500
	XSH	SPRING LOADED TERMINAL BLOCKS FOR SPACE HEATER		3	M6/8.RS	ENTRELEC	1SNA 115 688 R2500

AS-BUILT BY _____ DATE _____ | CONTRACT NO. 11131113/00 | JOB ORDER NO. S-13656

REV. NO.	DATE	DESCRIPTION
01	13 49	FACTORY ASBUILT
00	13 05	FOR APPROVAL

DRAWN BY RIZ CHECKED BY KVR
DATE STARTED 30.01.2013 DATE COMPLETED _____
OPRG. DEPT. CTPD ENG. DEPT. AUT-PSAC

LIST OF APPARATUS
132KV BUSBAR PROTN.MAIN-2 BU PANEL +BBP2-5
S/S 8709 - 132/13.8KV IN AL-KHARJ CITY
RIYADH SAUDI ARABIA

الشركة الوطنية لنقل الكهرباء
نقل الكهرباء
National Grid SA

INDEX	PLANT NO.	DRAWING NUMBER	SHEET NO. SHT	SHEET NO. CONT.	REV. NO.
-	C421	CD-323008	L03	L04	01

NG/D2-D (2012/01)
DMS VECTOR NGD200

THIS DRAWING AND THE INFORMATION CONTAINED HEREIN ARE THE SOLE PROPERTY OF NationalGrid SA NO REPRODUCTION IN FULL OR IN PART SHALL BE OBTAINED FROM THIS DOCUMENT WITHOUT THE WRITTEN CONSENT OF ITS OWNER.

LABEL REF.	LABEL ENGRAVING	MATERIALS	ENGRAVING	LABEL SIZE	LETTER SIZE
U08.5001	U08.5001 87B+50BF-2/BU-D02	TRAFOLITE	BLACK LETTERS ON WHITE BACKGROUND	50X15mm	4mm
U08.5002	U08.5002 87B+50BF-2/BU-D04	TRAFOLITE	BLACK LETTERS ON WHITE BACKGROUND	50X15mm	4mm
U15.5001	U15.5001 87B+50BF-2/BU-D06	TRAFOLITE	BLACK LETTERS ON WHITE BACKGROUND	50X15mm	4mm
U22.5001	U22.5001 TS-1	ALUMINUM PAPER FOIL	BLACK LETTERS	50X10mm	3mm
U22.5002	U22.5002 TS-2	ALUMINUM PAPER FOIL	BLACK LETTERS	50X10mm	3mm
U22.5003	U22.5003 TS-3	ALUMINUM PAPER FOIL	BLACK LETTERS	50X10mm	3mm
U26.101	U26.101 74BF-2/D02 74BF-2/D04	ALUMINUM PAPER FOIL	BLACK LETTERS	50X10mm	3mm
U26.301	U26.301 74BF-2/D06	ALUMINUM PAPER FOIL	BLACK LETTERS	50X10mm	3mm
U39.5001	U39.5001 DC SUPPLY MCB FOR D02	TRAFOLITE	BLACK LETTERS ON WHITE BACKGROUND	50X15mm	4mm
U39.5002	U39.5002 DC SUPPLY MCB FOR D04	TRAFOLITE	BLACK LETTERS ON WHITE BACKGROUND	50X15mm	4mm
U39.5003	U39.5003 DC SUPPLY MCB FOR D06	TRAFOLITE	BLACK LETTERS ON WHITE BACKGROUND	50X15mm	4mm
U39.5004	U39.5004 C01-127V,C02-220V	TRAFOLITE	BLACK LETTERS ON WHITE BACKGROUND	50X15mm	4mm
U39.5005	U39.5005 TJ	TRAFOLITE	BLACK LETTERS ON WHITE BACKGROUND	50X15mm	4mm

AS-BUILT BY _____ DATE _____ | CONTRACT NO. 11131113/00 | JOB ORDER NO. S-13656

REV. NO.	DATE	DESCRIPTION
01	13 49	FACTORY ASBUILT
00	13 05	FOR APPROVAL

DRAWN BY RIZ CHECKED BY KVR
DATE STARTED 30.01.2013 DATE COMPLETED _____
OPRG. DEPT. CTPD ENG. DEPT. AUT-PSAC

LIST OF APPARATUS
132KV BUSBAR PROTN.MAIN-2 BU PANEL +BBP2-5
S/S 8709 - 132/13.8KV IN AL-KHARJ CITY
RIYADH SAUDI ARABIA

الشركة الوطنية لنقل الكهرباء
نقل الكهرباء
National Grid SA

INDEX	PLANT NO.	DRAWING NUMBER	SHEET NO. SHT	SHEET NO. CONT.	REV. NO.
-	C421	CD-323008	L04	L05	01

NG/D2-D (2012/01)
DMS VECTOR NGD200

THIS DRAWING AND THE INFORMATION CONTAINED HEREIN ARE THE SOLE PROPERTY OF NationalGrid SA NO REPRODUCTION IN FULL OR IN PART SHALL BE OBTAINED FROM THIS DOCUMENT WITHOUT THE WRITTEN CONSENT OF ITS OWNER.

LABEL REF.	LABEL ENGRAVING	MATERIALS	ENGRAVING	LABEL SIZE	LETTER SIZE
C1	C1 127V AC SUPPLY MCB	TRAFOLITE	BLACK LETTERS ON WHITE BACKGROUND	50X15mm	4mm
C2	C2 220V AC SUPPLY MCB	TRAFOLITE	BLACK LETTERS ON WHITE BACKGROUND	50X15mm	4mm
C3	C3 THERMOSTAT	TRAFOLITE	BLACK LETTERS ON WHITE BACKGROUND	50X15mm	4mm
C7	C7 ON/OFF SWITCH	TRAFOLITE	BLACK LETTERS ON WHITE BACKGROUND	50X15mm	4mm
DS	DS DOOR SWITCH	TRAFOLITE	BLACK LETTERS ON WHITE BACKGROUND	50X15mm	4mm
IL	IL ILLUMINATION LAMP	TRAFOLITE	BLACK LETTERS ON WHITE BACKGROUND	50X15mm	4mm
SH	SH SPACE HEATER	TRAFOLITE	BLACK LETTERS ON WHITE BACKGROUND	50X15mm	4mm

AS-BUILT BY _____ DATE _____ | CONTRACT NO. 11131113/00 | JOB ORDER NO. S-13656

REV. NO.	DATE	DESCRIPTION
01	13 49	FACTORY ASBUILT
00	13 05	FOR APPROVAL

DRAWN BY RIZ CHECKED BY KVR
DATE STARTED 30.01.2013 DATE COMPLETED _____
OPRG. DEPT. CTPD ENG. DEPT. AUT-PSAC

LIST OF APPARATUS
132KV BUSBAR PROTN.MAIN-2 BU PANEL +BBP2-5
S/S 8709 - 132/13.8KV IN AL-KHARJ CITY
RIYADH SAUDI ARABIA

الشركة الوطنية لنقل الكهرباء
نقل الكهرباء
National Grid SA

INDEX	PLANT NO.	DRAWING NUMBER	SHEET NO. SHT	SHEET NO. CONT.	REV. NO.
-	C421	CD-323008	L05	NIL	01

NG/D2-D (2012/01)
DMS VECTOR NGD200

THIS DRAWING AND THE INFORMATION CONTAINED HEREIN ARE THE SOLE PROPERTY OF NationalGrid SA NO REPRODUCTION IN FULL OR IN PART SHALL BE OBTAINED FROM THIS DOCUMENT WITHOUT THE WRITTEN CONSENT OF ITS OWNER.

POWER SYSTEMS NETWORK MANAGEMENT
PROTECTION AND SUBSTATION AUTOMATION SYSTEMS
WBS NO: S-13656

ABB AUTOMATION COMPANY LTD.
414, AL-KHARJ ROAD
SECOND INDUSTRIAL CITY
RIYADH-11383 K.S.A

CONTRACTOR : ABB Contracting Company

CLIENT : National GridSA

PROJECT : CONSTRUCTION OF NEW 132/13.8kV SS 8709 IN AL-KHARJ CITY

SUBSTATION : S/S 8709

CONTRACT NO. : 11131113/00

TITLE : SCHEMATICS DRAWINGS - +BBP2-5
[132KV BUSBAR PROTECTION MAIN-2 BAY UNIT PANEL]

REV. NO.	DATE	DESCRIPTION
01	13 49	FACTORY ASBUILT
00	13 05	FOR APPROVAL

AS-BUILT BY _____ DATE _____ CONTRACT NO. 11131113/00 JOB ORDER NO. S-13656

DRAWN BY RIZ CHECKED BY KVR
DATE STARTED 30.01.2013 DATE COMPLETED _____
OPRG. DEPT. CTPD ENG. DEPT. AUT-PSAC

COVER SHEET
132KV BUSBAR PROTN.MAIN-2 BU PANEL +BBP2-5
S/S 8709 - 132/13.8KV IN AL-KHARJ CITY
RIYADH SAUDI ARABIA

الشركة الوطنية لنقل الكهرباء
نقل الكهرباء
National Grid SA

INDEX	PLANT NO.	DRAWING NUMBER	SHEET NO. SHT	SHEET NO. CONT.	REV. NO.
-	C421	CD-323009	000	001	01

NG/D2-D (2012/01)
DMS VECTOR NGD200

THIS DRAWING AND THE INFORMATION CONTAINED HEREIN ARE THE SOLE PROPERTY OF NationalGrid SA NO REPRODUCTION IN FULL OR IN PART SHALL BE OBTAINED FROM THIS DOCUMENT WITHOUT THE WRITTEN CONSENT OF ITS OWNER.

CONTENTS	ABB SHT.NO.	REV.00	REV.01	REV.02
COVER SHEET	000	X	X	
CONTENTS SHEET	001	X	X	
GRAPHICAL SYMBOLS FOR DIAGRAMS	011	X	X	
GRAPHICAL SYMBOLS FOR DIAGRAMS	012	X	X	
COMMON LEGEND	013	X	X	
FERRULE AND WIRING DETAILS	014	X	X	
DRAWING REFERENCES	015	X	X	
DRAWING REFERENCES	016	X	X	
PRIMARY SYSTEM	051-056	X	X	
AC SUPPLY FOR ILLUMINATION & POWER SOCKET	211	X	X	
CUB. LIGHTING, HEATER & SOCKET ALARM CKT.	212	X	X	
DC SUPPLY DISTRIBUTION	216	X	X	
CURRENT TRANSFORMER INPUTS -87B+50BF-2/BU-D02	221	X	X	
CURRENT TRANSFORMER INPUTS -87B+50BF-2/BU-D04	222	X	X	
CURRENT TRANSFORMER INPUTS -87B+50BF-2/BU-D06	223	X	X	
87B+50BF-2/BU-D02 PROTN.RELAY-BINARY INPUTS	231	X	X	
87B+50BF-2/BU-D02 PROTN.RELAY-BINARY INPUTS	232	X	X	
CBF + BUSBAR PROTN.-2 TRIP RELAY CIRCUIT -D05	233	X	X	
87B+50BF-2/BU-D04 PROTN.RELAY-BINARY INPUTS	234	X	X	
87B+50BF-2/BU-D04 PROTN.RELAY-BINARY INPUTS	235	X	X	
CBF + BUSBAR PROTN.-2 TRIP RELAY CIRCUIT -D03	236	X	X	
87B+50BF-2/BU-D06 PROTN.RELAY-BINARY INPUTS	237	X	X	
87B+50BF-2/BU-D06 PROTN.RELAY-BINARY INPUTS	238	X	X	
CBF + BUSBAR PROTN.-2 TRIP RELAY CIRCUIT -D01	239	X	X	

CONTENTS	ABB SHT.NO.	REV.00	REV.01	REV.02
COMMON ALARM CIRCUITS	292	X	X	
BLOCK REFERENCE 87B+50BF-2/BU-D02	293	X	X	
BLOCK REFERENCE 87B+50BF-2/BU-D02	294	X	X	
BLOCK REFERENCE 87B+50BF-2/BU-D04	295	X	X	
BLOCK REFERENCE 87B+50BF-2/BU-D04	296	X	X	
BLOCK REFERENCE 87B+50BF-2/BU-D06	297	X	X	
BLOCK REFERENCE 87B+50BF-2/BU-D06	298	X	X	
TERMINAL BLOCKS REFERENCE	301	X	X	

REV. NO.	DATE	DESCRIPTION
01	13 49	FACTORY ASBUILT
00	13 05	FOR APPROVAL

AS-BUILT BY _____ DATE _____

CONTRACT NO. 11131113/00

JOB ORDER NO. S-13656

DRAWN BY RIZ CHECKED BY KVR

DATE STARTED 30.01.2013 DATE COMPLETED _____

OPRG. DEPT. CTPD ENG. DEPT. AUT-PSAC

CONTENTS SHEET

132KV BUSBAR PROTN.MAIN-2 BU PANEL +BBP2-5

S/S 8709 - 132/13.8KV IN AL-KHARJ CITY

RIYADH SAUDI ARABIA

الشركة الوطنية لنقل الكهرباء

نقل الكهرباء National Grid SA

INDEX	PLANT NO.	DRAWING NUMBER	SHEET NO. SHT	SHEET NO. CONT.	REV. NO.
-	C421	CD-323009	001	002	01

NG/D2-D (2012/01)

DMS VECTOR NGD200

THIS DRAWING AND THE INFORMATION CONTAINED HEREIN ARE THE SOLE PROPERTY OF NationalGrid SA NO REPRODUCTION IN FULL OR IN PART SHALL BE OBTAINED FROM THIS DOCUMENT WITHOUT THE WRITTEN CONSENT OF ITS OWNER.

SYMBOL	DESCRIPTION
	FRAME CONNECTION
	EARTH CONNECTION
	RESISTOR
	VARIABLE RESISTOR
	RESISTOR WITH PRESET ADJUSTMENT
	CAPACITOR
	SEMICONDUCTOR DIODE USED AS A CAPACITIVE DEVICE
	OPEN CONTACT, MAKE CONTACT
	CLOSED CONTACT, BREAK CONTACT
	CHANGE-OVER CONTACT, BREAK BEFORE MAKE
	MAKE CONTACT WHICH IS EARLY WHEN OPERATING AND LATE WHEN RELEASING
	BREAK CONTACT WHICH IS LATE WHEN OPERATING AND EARLY WHEN RELEASING
	SWITCHING DEVICE WITH MANUAL CONTROL
	MAKE CONTACT DELAYED WHEN OPERATING
	BREAK CONTACT DELAYED WHEN RELEASING
	MAKE CONTACT DELAYED WHEN OPERATING AND RELEASING
	MAIN CONTACT OF A SWITCH DISCONNECTOR
	MAIN CONTACT OF A DISCONNECTOR

SYMBOL	DESCRIPTION
	MAIN CONTACT OF A CIRCUIT BREAKER
	PASSING MAKE CONTACT CLOSING MOMENTARILY DURING OPERATION AND RELEASE
	BREAK CONTACT DELAYED WHEN OPERATING
	MAKE CONTACT DELAYED WHEN RELEASING
	TWO MECHANICAL LINKS CROSSING WITHOUT CONNECTION
	JUNCTION OF MECHANICAL LINKS
	AUTOMATIC RESET
	NON-AUTOMATIC RESET
	SWITCHING DEVICE WITH MANUAL OPERATION AND WITH AUTOMATIC RESET
	SWITCHING DEVICE WITH MANUAL OPERATION AND WITH NON-AUTOMATIC RESET
	CHANGE-OVER SWITCHING DEVICE WITH MANUAL CONTROL AUTOMATIC RESET FROM POSITION 1-2 TO THE NEUTRAL POSITION
	RELAY WITH MAKE CONTACT
	RELAY WITH CHANGE-OVER CONTACT
	RELAY WITH MAKE CONTACT, DELAYED WHEN OPERATING
	RELAY WITH MAKE CONTACT, DELAYED WHEN RELEASING
	RELAY WITH MAKE CONTACT, DELAYED WHEN OPERATING AND RELEASING

SYMBOL	DESCRIPTION
	RELAY WITH TWO MAKE CONTACTS, ONE OF THEM DELAYED WHEN OPERATING
	RELAY WITH TWO ACTUATORS AND A TWO STABLE POSITIONS
	SIGNALLING LAMP
	MECHANICAL INDICATOR WITH AUTOMATIC RESET
	MECHANICAL INDICATOR WITH NON-AUTOMATIC RESET
	ELECTRICALLY CONTROLLED MECHANICAL INDICATOR WITH AUTOMATIC RESET
	ELECTRICALLY CONTROLLED MECHANICAL INDICATOR WITH NON-AUTOMATIC RESET
	RELAY WITH MECHANICAL INDICATOR
	ELECTRO-MECHANICAL POSITION INDICATOR WITH ONE DE-ENERGIZED AND ONE OPERATED POSITION
	ELECTRO-MECHANICAL POSITION INDICATOR WITH ONE DE-ENERGIZED AND TWO OPERATED POSITION
	BELL, BUZZER
	SIREN , HORN

AS-BUILT BY _____ DATE _____ | CONTRACT NO. 11131113/00 | JOB ORDER NO. S-13656

REV. NO.	DATE	DESCRIPTION
01	13 49	FACTORY ASBUILT
00	13 05	FOR APPROVAL

DRAWN BY RIZ CHECKED BY KVR
DATE STARTED 30.01.2013 DATE COMPLETED _____
OPRG. DEPT. CTPD ENG. DEPT. AUT-PSAC

GRAPHICAL SYMBOLS FOR DIAGRAMS
132KV BUSBAR PROTN.MAIN-2 BU PANEL +BBP2-5
S/S 8709 - 132/13.8KV IN AL-KHARJ CITY
RIYADH SAUDI ARABIA

الشركة الوطنية لنقل الكهرباء
نقل الكهرباء National Grid SA

INDEX	PLANT NO.	DRAWING NUMBER	SHEET NO. SHT	SHEET NO. CONT.	REV. NO.
-	C421	CD-323009	011	012	01

NG/D2-D (2012/01)
DMS VECTOR NGD200

THIS DRAWING AND THE INFORMATION CONTAINED HEREIN ARE THE SOLE PROPERTY OF NationalGrid SA NO REPRODUCTION IN FULL OR IN PART SHALL BE OBTAINED FROM THIS DOCUMENT WITHOUT THE WRITTEN CONSENT OF ITS OWNER.

SYMBOL	DESCRIPTION
	FUSE / LINK
	FUSE WITH THE SUPPLY SIDE INDICATED
	SINGLE-PHASE TRANSFORMER WITH TWO SEPARATE WINDINGS (TWO ALTERNATIVE FORMS)
	SINGLE-PHASE TRANSFORMER WITH THREE SEPARATE WINDINGS (TWO ALTERNATIVE FORMS)
	SINGLE-PHASE TRANSFORMER WITH FERRO MAGNETIC CORE
	SINGLE-PHASE VOLTAGE TRANSFORMER (MULTI-LINE AND SINGLE-LINE REPRESENTATION)
	SINGLE-PHASE VOLTAGE TRANSFORMER WITH TWO SECONDARY WINDINGS (MULTI-LINE AND SINGLE-LINE REPRESENTATION)
	CURRENT TRANSFORMER (MULTI-LINE AND SINGLE-LINE REPRESENTATION)
	CURRENT TRANSFORMER WITH TWO CORES (MULIT-LINE AND SINGLE-LINE REPRESENTATION)
	CURRENT TRANSFORMER WITH TWO SECONDARY WINDINGS ON ONE CORE (MULTI-LINE AND SINGLE-LINE REPRESENTATION)
	FILTER
	HIGH-PASS FILTER
	BAND-PASS FILTER
V	VOLTMETER
A	AMMETER

SYMBOL	DESCRIPTION
W	WATTMETER
Var	VARMETER
PF	POWER FACTOR METER
	POSITION INDICATOR
	SYNCHROSCOPE
V	RECORDING VOLTMETER
W	RECORDING WATTMETER
h	HOUR METER
Wh	WATT-HOUR METER
Wh	WATT-HOUR METER FOR ENERGY FROM A BUSBAR SYSTEM
	ELEMENT WITH STATIC INPUT
	ELEMENT WITH STATIC NEGATED INPUT
	ELEMENT WITH STATIC NEGATED OUTPUT
>	ELEMENT WITH DYNAMIC INPUT
>	ELEMENT WITH DYNAMIC NEGATED INPUT
	ELEMENT WITH INHIBITING INPUT

SYMBOL	DESCRIPTION
	ELEMENT WITH NEGATED INHIBITING INPUT
	ELEMENT WITH INPUT WHICH DOES NOT CARRY ANY LOGIC INFORMATION
X|	ELEMENT WITH POSTPONED OUTPUT
&	AND-ELEMENT WITH TWO INPUTS
>1	OR-ELEMENT WITH TWO INPUTS
≥2	LOGIC THRESHOLD ELEMENT WITH FOUR INPUTS AND THRESHOLD VALUE 2
=2	ELEMENT WITH THREE INPUTS FOR "2 AND ONLY 2"
=1	EXCLUSIVE OR-ELEMENT WITH THREE INPUTS
=	LOGIC IDENTITY ELEMENT WITH THREE INPUTS
>n/2	MAJORITY ELEMENT WITH THREE INPUTS
1	NEGATOR
&	NAND ELEMENT WITH TWO INPUTS
>1	NOR ELEMENT WITH TWO INPUTS
X Y	BISTABLE ELEMENT

AS-BUILT BY _____ DATE _____	CONTRACT NO. 11131113/00	JOB ORDER NO. S-13656
01 / 13 49 / FACTORY ASBUILT	DRAWN BY RIZ	CHECKED BY KVR
00 / 13 05 / FOR APPROVAL	DATE STARTED 30.01.2013	DATE COMPLETED _____
REV. NO. / DATE / DESCRIPTION	OPRG. DEPT. CTPD	ENG. DEPT. AUT-PSAC

GRAPHICAL SYMBOLS FOR DIAGRAMS

132KV BUSBAR PROTN.MAIN-2 BU PANEL +BBP2-5

S/S 8709 - 132/13.8KV IN AL-KHARJ CITY

RIYADH SAUDI ARABIA

الشركة الوطنية لنقل الكهرباء

نقل الكهرباء National Grid SA

INDEX	PLANT NO.	DRAWING NUMBER	SHEET NO. SHT	SHEET NO. CONT.	REV. NO.
-	C421	CD-323009	012	013	01

NG/D2-D (2012/01)

DMS VECTOR NGD200

THIS DRAWING AND THE INFORMATION CONTAINED HEREIN ARE THE SOLE PROPERTY OF NationalGrid SA NO REPRODUCTION IN FULL OR IN PART SHALL BE OBTAINED FROM THIS DOCUMENT WITHOUT THE WRITTEN CONSENT OF ITS OWNER.

LEGENDS

±R1	DC SUPPLY – MAIN PROTECTION
±R2	DC SUPPLY – SECONDARY PROTECTION
±R3	DC SUPPLY – BACK UP PROTECTION
±IT	DC SUPPLY – INTER TRIP
FL	DC SUPPLY – FLASHING CIRCUIT
BB RS±	DC SUPPLY – BUS BAR – PROTECTION RESET
BB CBF±/CBF±	DC SUPPLY – CBF PROTECTION
R	RESET BUS – ALARM SYSTEM
CR	CONTROL ROOM
ECC	ENERGY CONTROL CENTRE
LOCAL	THE LOCATION OF CONTROLLED DEVICE
REMOTE	ANY OTHER LOCATION NOT LOCAL
ON	CB NORMALLY OPEN AUXILIARY CONTACT
OFF	CB NORMALLY CLOSED AUXILIARY CONTACT
A	COMMON
T	TEST POSITION
S	SERVICE POSITION
CS	CLOSE IN SERVICE POSITION
CT	CLOSE IN TEST POSITION
LS	LOCAL SERVICE
LT	LOCAL TEST
LC	LOCAL CLOSE
LO	LOCAL OPEN
RO	REMOTE OPEN
OP	OPERATE
RE	RESET

NOTES

LABELS

WHITE LABEL WITH BLACK LETTERING WILL BE PROVIDED FOR ALL MOUNTED APPARATUS EQUIPMENT IDENTIFICATION AND FUNCTION REFERENCE LABEL WILL BE PROVIDED FOR FRONT MOUNTED EQUIPMENTS OF THE PANEL AND EQUIPMENT IDENTIFICATION LABEL WILL BE PROVIDED FOR INTERNALLY MOUNTED EQUIPMENTS

WIRING

PVC INSULATED 600V GRADE
2.5 SQ.mm. YELLOW COLOURED FOR CT CIRCUITS
2.5 SQ.mm. RE COLOURED FOR VT CIRCUITS
1.5 SQ.mm. GREY COLOURED FOR DC SUPPLY, SCADA AND CONTROL CIRCUITS
2.5 SQ.mm. BLACK COLOURED FOR AVC AND AC CIRCUITS
2.5 SQ.mm. YELLOW/GREEN COLOURED FOR EARTHING CONNECTIONS
FOLLOWING MARKERS SHALL BE PROVIDED ON FOLLOWING WIRES:
+ SIGN FOR DC + WIRE
– SIGN FOR DC – WIRE

LUGS

A. CT CIRCUITS– RING TYPE
B. OTHER CIRCUITS – SPADE TYPE

FERULLING

YELLO TUBE 3.2 mm FOR 1.5SQ mm WIRES AND 4.2 FOR 2.5 SQ mm WIRES
(AS PER 31 – TMSS–1, RE.0)

AS-BUILT BY _____ DATE _____ | CONTRACT NO. 11131113/00 | JOB ORDER NO. S-13656

REV. NO.	DATE	DESCRIPTION
01	13 49	FACTORY ASBUILT
00	13 05	FOR APPROVAL

DRAWN BY RIZ CHECKED BY KVR
DATE STARTED 30.01.2013 DATE COMPLETED _____
OPRG. DEPT. CTPD ENG. DEPT. AUT-PSAC

COMMON LEGEND
132KV BUSBAR PROTN.MAIN-2 BU PANEL +BBP2-5
S/S 8709 - 132/13.8KV IN AL-KHARJ CITY
RIYADH SAUDI ARABIA

الشركة الوطنية لنقل الكهرباء
نقل الكهرباء National Grid SA

INDEX	PLANT NO.	DRAWING NUMBER	SHEET NO. SHT	SHEET NO. CONT.	REV. NO.
-	C421	CD-323009	013	014	01

NG/D2-D (2012/01)
DMS VECTOR NGD200

THIS DRAWING AND THE INFORMATION CONTAINED HEREIN ARE THE SOLE PROPERTY OF NationalGrid SA NO REPRODUCTION IN FULL OR IN PART SHALL BE OBTAINED FROM THIS DOCUMENT WITHOUT THE WRITTEN CONSENT OF ITS OWNER.

FOR 132kV RELAY & CONTROL, PROTN. PANELS

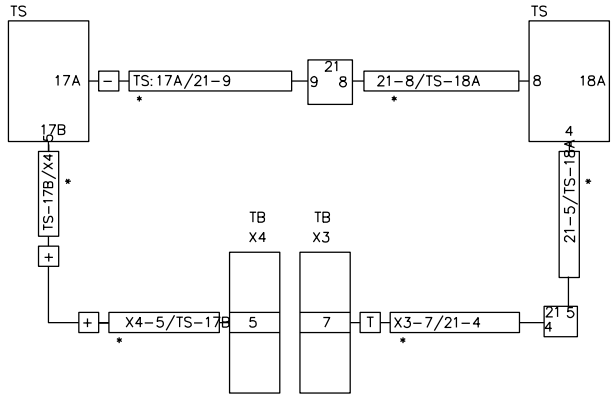

AS PER IEC-391 FIG 14a (W/O SUPPLEMENTARY/IDENTIFICATION MARK)

FOR 132kV PANELS INTERPANEL WIRING

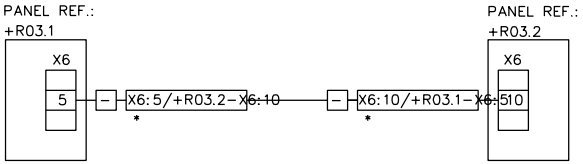

AS PER IEC-391 FIG 14d (W/O SUPPLEMENTARY/IDENTIFICATION MARK)

WIRES – PVC insulated,stranded, coaled annealed copper conductor graded for 1000V	a. CT Circuits – 2.5 Sqmm PVC Yellow colour
	b. VT Circuits – 1.5 Sqmm PVC Red colour
	c. DC, & CONTROL Circuits – 1.5 Sqmm PVC Grey colour
	d. Alarm Circuits – 1.0 Sqmm PVC Blue colour
	e. AVC & AC Circuits – 2.5 Sqmm PVC Black colour
	f. Earth Circuits – 2.5 Sqmm PVC Yellow/Green colour
LUGS – Pre-Insulated	a(CT Circuits – Ring type
	b(Other Circuits – Spade type

NOTE: 1 ADDITIONAL MARKING AS APPLICABLE

NOTE: 2 FERRULE NUMBERING WILL BE BLACK LETTERS ON YELLOW TUBE
3.2 mm for 1.5 sq mm wires and
4.2 mm for 2.5 sq mm wires
(As per 31-TMSS-1, REV 0)

NOTE: 3 STARTING POINT OF THE FERRULE LEFT TO RIGHT

AS-BUILT BY _____ DATE _____ | CONTRACT NO. 11131113/00 | JOB ORDER NO. S-13656

REV. NO.	DATE	DESCRIPTION
01	13 49	FACTORY ASBUILT
00	13 05	FOR APPROVAL

DRAWN BY RIZ CHECKED BY KVR
DATE STARTED 30.01.2013 DATE COMPLETED _____
OPRG. DEPT. CTPD ENG. DEPT. AUT-PSAC

FERRULE AND WIRING DETAILS
132KV BUSBAR PROTN.MAIN-2 BU PANEL +BBP2-5
S/S 8709 - 132/13.8KV IN AL-KHARJ CITY
RIYADH SAUDI ARABIA

الشركة الوطنية لنقل الكهرباء
نقل الكهرباء National Grid SA

INDEX	PLANT NO.	DRAWING NUMBER	SHEET NO. SHT	SHEET NO. CONT.	REV. NO.
-	C421	CD-323009	014	015	01

NG/D2-D (2012/01)
DMS VECTOR NGD200

THIS DRAWING AND THE INFORMATION CONTAINED HEREIN ARE THE SOLE PROPERTY OF NationalGrid SA NO REPRODUCTION IN FULL OR IN PART SHALL BE OBTAINED FROM THIS DOCUMENT WITHOUT THE WRITTEN CONSENT OF ITS OWNER.

MANUFACTURER	SCHEMATICS DWG.NO	PANEL DESCRIPITION	PANEL REFERENCE
ABB PROTECTION & SUBSTATION AUTOMATION		SS 8709 132kV RELAY PANELS	
	CD-322928	132/13.8kV GT-1 RELAY PANEL -1	+R05.1
		132/13.8kV GT-1 RELAY PANEL -2	+R05.2
	CD-322931	132/13.8kV GT-2 RELAY PANEL -1	+R01.1
		132/13.8kV GT-2 RELAY PANEL -2	+R01.2
	CD-322934	132/13.8kV GT-3 RELAY PANEL -1	+R04.1
		132/13.8kV GT-3 RELAY PANEL -2	+R04.2
	CD-322936	132/13.8kV TRANSFORMER-1,2& 3 AVC PANEL	+AVC
	CD-322922	132KV SPARE-1 UGF RELAY PANEL -1	+R07.1
		132KV SPARE-1 UGF RELAY PANEL -2	+R07.2
	CD-322916	132KV 8020 UGF RELAY PANEL -1	+R02.1
		132KV 8020 UGF RELAY PANEL -2	+R02.2
	CD-322919	132KV 8710 UGF RELAY PANEL -1	+R03.1
		132KV 8710 UGF RELAY PANEL -2	+R03.2
	CD-322925	132KV SPARE-2 UGF RELAY PANEL -1	+R06.1
		132KV SPARE-2 UGF RELAY PANEL -2	+R06.2
	CD-323012	132KV FOIP PANEL	+FOIP
	CD-322946	132kV BUS COUPLER-A	+R130
	CD-322948	132kV BUS COUPLER-B	+R230
	CD-322950	132kV BUS SECTION	+R120
	CD-322991	132kV BUSBAR PROTECTION MAIN-1 CENTRAL UNIT PANEL	+BBP1-1
	CD-322993	132kV BUSBAR PROTECTION MAIN-1 BAY UNIT PANEL	+BBP1-2
	CD-322995	132kV BUSBAR PROTECTION MAIN-1 BAY UNIT PANEL	+BBP1-3
	CD-322997	132kV BUSBAR PROTECTION MAIN-1 BAY UNIT PANEL	+BBP1-4
	CD-322999	132kV BUSBAR PROTECTION MAIN-1 BAY UNIT PANEL	+BBP1-5
	CD-323001	132kV BUSBAR PROTECTION MAIN-2 CENTRAL UNIT PANEL	+BBP2-1
	CD-323003	132kV BUSBAR PROTECTION MAIN-2 BAY UNIT PANEL	+BBP2-5
	CD-323005	132kV BUSBAR PROTECTION MAIN-2 BAY UNIT PANEL	+BBP2-3
	CD-323007	132kV BUSBAR PROTECTION MAIN-2 BAY UNIT PANEL	+BBP2-4
	CD-323009	132kV BUSBAR PROTECTION MAIN-2 BAY UNIT PANEL	+BBP2-5

AS-BUILT BY _____ DATE _____ | CONTRACT NO. 11131113/00 | JOB ORDER NO. S-13656

REV. NO.	DATE	DESCRIPTION
01	13 49	FACTORY ASBUILT
00	13 05	FOR APPROVAL

DRAWN BY RIZ CHECKED BY KVR
DATE STARTED 30.01.2013 DATE COMPLETED _____
OPRG. DEPT. CTPD ENG. DEPT. AUT-PSAC

DRAWING REFERENCES
132KV BUSBAR PROTN.MAIN-2 BU PANEL +BBP2-5
S/S 8709 - 132/13.8KV IN AL-KHARJ CITY
RIYADH SAUDI ARABIA

الشركة الوطنية لنقل الكهرباء
نقل الكهرباء
National Grid SA

INDEX	PLANT NO.	DRAWING NUMBER	SHEET NO. SHT	SHEET NO. CONT.	REV. NO.
-	C421	CD-323009	015	016	01

NG/D2-D (2012/01)
DMS VECTOR NGD200

THIS DRAWING AND THE INFORMATION CONTAINED HEREIN ARE THE SOLE PROPERTY OF NationalGrid SA NO REPRODUCTION IN FULL OR IN PART SHALL BE OBTAINED FROM THIS DOCUMENT WITHOUT THE WRITTEN CONSENT OF ITS OWNER.

MANUFACTURER	SCHEMATICS DWG.NO	PANEL DESCRIPITION	PANEL REFERENCE
ABB PROTECTION & SUBSTATION AUTOMATION		SS 8709 13.8KV RELAY PANELS	
	CD-322952	13.8KV Capacitor Bank-1 Protection Panel	+CBP-1
	CD-322954	13.8KV Capacitor Bank-2 Protection Panel	+CBP-2
	CD-322956	13.8KV Capacitor Bank-2 Protection Panel	+CBP-3
	CD-322958	13.8 KV ACCS PANEL	+ACCS
	CD-322962	13.8KV ACSE PANEL	+ACSE
	CD-322968	13.8KV Under Voltage Load Shedding Panel	+UVLS
	CD-322964	13.8KV Under Frequency Load Shedding Panel-1	+UFLS01
	CD-322966	13.8KV Under Frequency Load Shedding Panel-2	+UFLS02

AS-BUILT BY _____ DATE _____ | CONTRACT NO. 11131113/00 | JOB ORDER NO. S-13656

REV. NO.	DATE	DESCRIPTION
01	13 49	FACTORY ASBUILT
00	13 05	FOR APPROVAL

DRAWN BY RIZ CHECKED BY KVR
DATE STARTED 30.01.2013 DATE COMPLETED _____
OPRG. DEPT. CTPD ENG. DEPT. AUT-PSAC

DRAWING REFERENCES
132KV BUSBAR PROTN.MAIN-2 BU PANEL +BBP2-5
S/S 8709 - 132/13.8KV IN AL-KHARJ CITY
RIYADH SAUDI ARABIA

الشركة الوطنية لنقل الكهرباء
نقل الكهرباء
National Grid SA

INDEX	PLANT NO.	DRAWING NUMBER	SHEET NO. SHT	SHEET NO. CONT.	REV. NO.
-	C421	CD-323009	016	051	01

NG/D2-D (2012/01)
DMS VECTOR NGD200

THIS DRAWING AND THE INFORMATION CONTAINED HEREIN ARE THE SOLE PROPERTY OF NationalGrid SA NO REPRODUCTION IN FULL OR IN PART SHALL BE OBTAINED FROM THIS DOCUMENT WITHOUT THE WRITTEN CONSENT OF ITS OWNER.

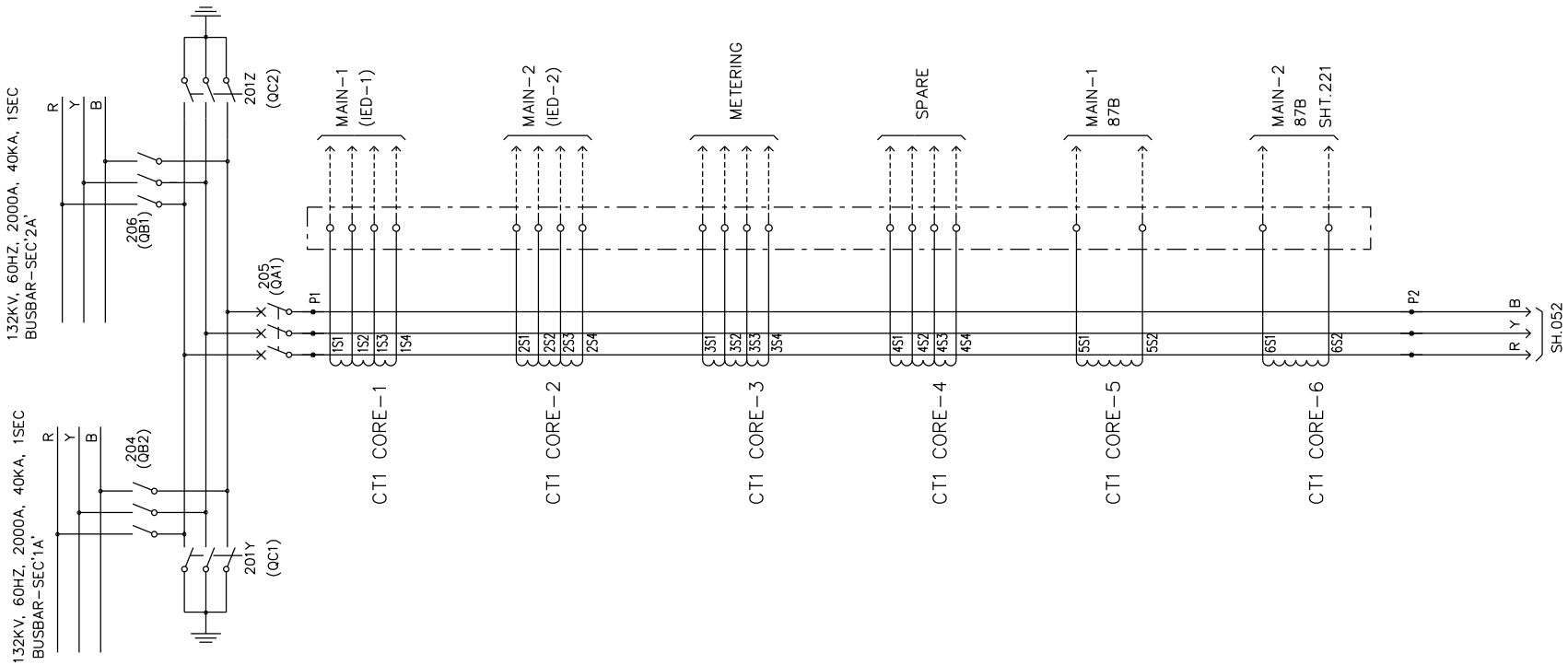

CT	RATIO	CLASS	VK IN VOLTS	IMAG @ VK IN mA	RCT IN (OHMS)	BURDEN IN VA	FUNCTION
CT1-1	1600-1200-800/1A	X	>1400	≤100	≤2	-	MAIN-1(IED-1)
CT1-2	1600-1200-800/1A	X	>1400	≤100	≤2	-	MAIN-2(IED-2)
CT1-3	1600-1200-800/1A	X	>1400	≤100	≤2	-	METERING
CT1-4	1600-1200-800/1A	X	>1400	≤100	≤2	-	SPARE
CT1-5	2000/1A	X	>600	≤25	≤5	-	87B MAIN-1
CT1-6	2000/1A	X	>600	≤25	≤5	-	87B MAIN-2

AS-BUILT BY _____ DATE _____ | CONTRACT NO. 11131113/00 | JOB ORDER NO. S-13656

REV. NO.	DATE	DESCRIPTION
01	13 49	FACTORY ASBUILT
00	13 05	FOR APPROVAL

DRAWN BY RIZ CHECKED BY KVR
DATE STARTED 30.01.2013 DATE COMPLETED _____
OPRG. DEPT. CTPD ENG. DEPT. AUT-PSAC

PRIMARY SYSTEM (8020 UGF BAY-D02)
132KV BUSBAR PROTN.MAIN-2 BU PANEL +BBP2-5
S/S 8709 - 132/13.8KV IN AL-KHARJ CITY
RIYADH SAUDI ARABIA

الشركة الوطنية لنقل الكهرباء
نقل الكهرباء
National Grid SA

INDEX	PLANT NO.	DRAWING NUMBER	SHEET NO. SHT	SHEET NO. CONT.	REV. NO.
-	C421	CD-323009	051	052	01

NG/D2-D (2012/01)
DMS VECTOR NGD200

THIS DRAWING AND THE INFORMATION CONTAINED HEREIN ARE THE SOLE PROPERTY OF NationalGrid SA NO REPRODUCTION IN FULL OR IN PART SHALL BE OBTAINED FROM THIS DOCUMENT WITHOUT THE WRITTEN CONSENT OF ITS OWNER.

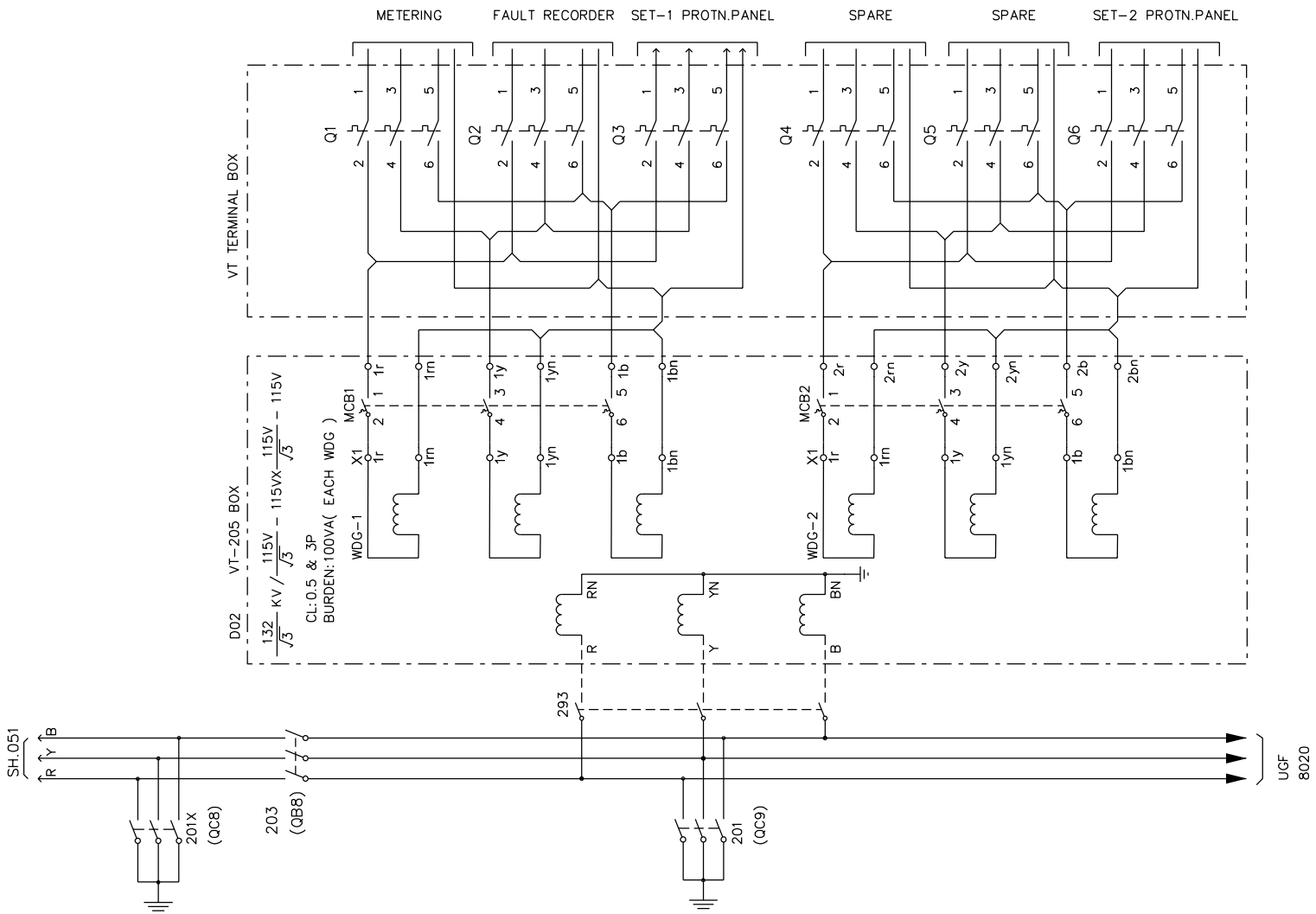

AS-BUILT BY _____ DATE _____	CONTRACT NO. 11131113/00	JOB ORDER NO. S-13656

REV. NO.	DATE	DESCRIPTION
01	13 49	FACTORY ASBUILT
00	13 05	FOR APPROVAL

DRAWN BY RIZ CHECKED BY KVR
DATE STARTED 30.01.2013 DATE COMPLETED _____
OPRG. DEPT. CTPD ENG. DEPT. AUT-PSAC

PRIMARY SYSTEM (8020 UGF BAY-D02)
132KV BUSBAR PROTN.MAIN-2 BU PANEL +BBP2-5
S/S 8709 - 132/13.8KV IN AL-KHARJ CITY
RIYADH SAUDI ARABIA

الشركة الوطنية لنقل الكهرباء
نقل الكهرباء
National Grid SA

INDEX	PLANT NO.	DRAWING NUMBER	SHEET NO. SHT	SHEET NO. CONT.	REV. NO.
-	C421	CD-323009	052	053	01

NG/D2-D (2012/01)
DMS VECTOR NGD200

THIS DRAWING AND THE INFORMATION CONTAINED HEREIN ARE THE SOLE PROPERTY OF NationalGrid SA NO REPRODUCTION IN FULL OR IN PART SHALL BE OBTAINED FROM THIS DOCUMENT WITHOUT THE WRITTEN CONSENT OF ITS OWNER.

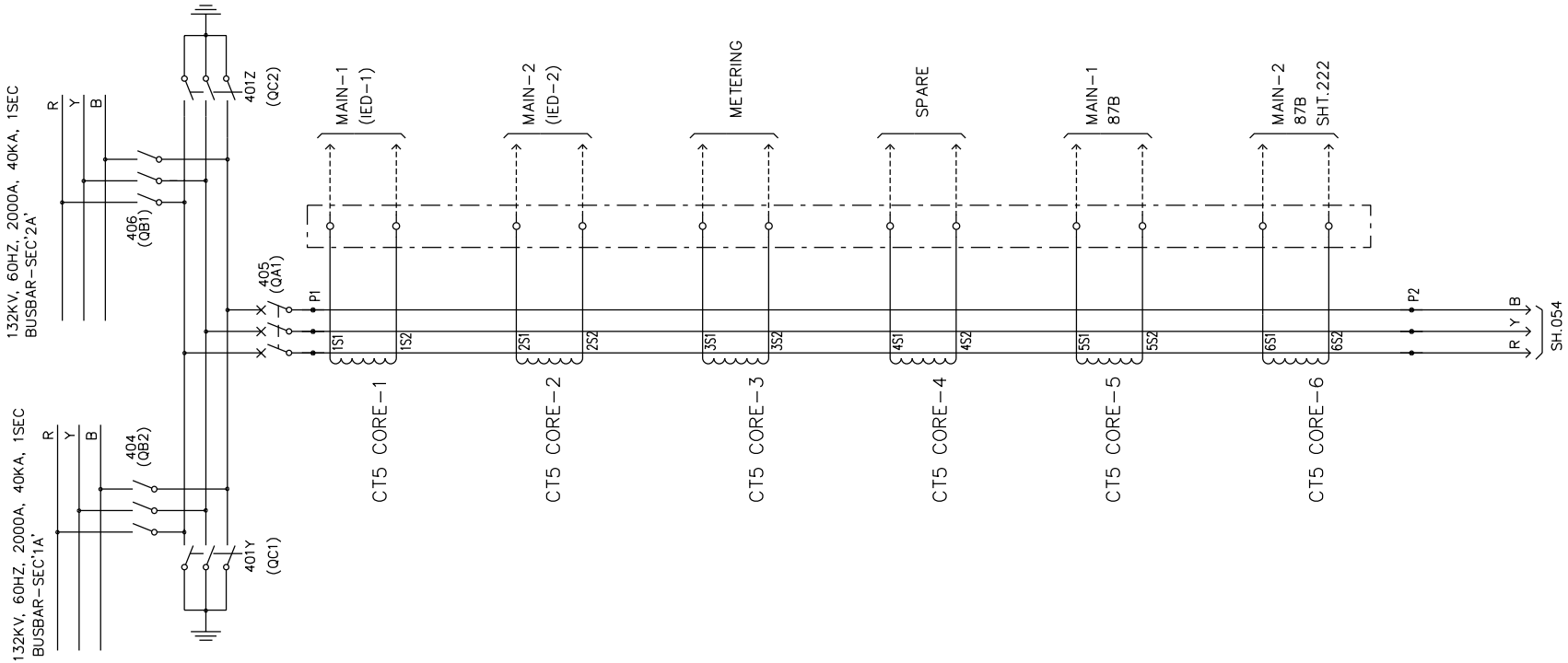

CT	RATIO	CLASS	VK IN VOLTS	IMAG @ VK IN mA	RCT IN (OHMS)	BURDEN IN VA	FUNCTION
CT5-1	300/1A	X	>360	≤50	≤1	–	MAIN-1(IED-1) TRAFO PROTN.
CT5-2	300/1A	X	>360	≤50	≤1	–	MAIN-2(IED-2) TRAFO PROTN.
CT5-3	300/1A	0.2Fs5	–	–	–	30	METERING
CT5-4	300/1A	5P20	–	–	–	30	SPARE
CT5-5	2000/1A	X	>600	≤25	≤5	–	87B MAIN-1
CT5-6	2000/1A	X	>600	≤25	≤5	–	87B MAIN-2

AS-BUILT BY _____ DATE _____ | CONTRACT NO. 11131113/00 | JOB ORDER NO. S-13656

REV. NO.	DATE	DESCRIPTION
01	13 49	FACTORY ASBUILT
00	13 05	FOR APPROVAL

DRAWN BY RIZ CHECKED BY KVR
DATE STARTED 30.01.2013 DATE COMPLETED _____
OPRG. DEPT. CTPD ENG. DEPT. AUT-PSAC

PRIMARY SYSTEM (TRANSFORMER- GT3 BAY-D04)
132KV BUSBAR PROTN.MAIN-2 BU PANEL +BBP2-5
S/S 8709 - 132/13.8KV IN AL-KHARJ CITY
RIYADH SAUDI ARABIA

الشركة الوطنية لنقل الكهرباء
نقل الكهرباء
National Grid SA

INDEX	PLANT NO.	DRAWING NUMBER	SHEET NO. SHT	SHEET NO. CONT.	REV. NO.
-	C421	CD-323009	053	054	01

NG/D2-D (2012/01)
DMS VECTOR NGD200

THIS DRAWING AND THE INFORMATION CONTAINED HEREIN ARE THE SOLE PROPERTY OF NationalGrid SA NO REPRODUCTION IN FULL OR IN PART SHALL BE OBTAINED FROM THIS DOCUMENT WITHOUT THE WRITTEN CONSENT OF ITS OWNER.

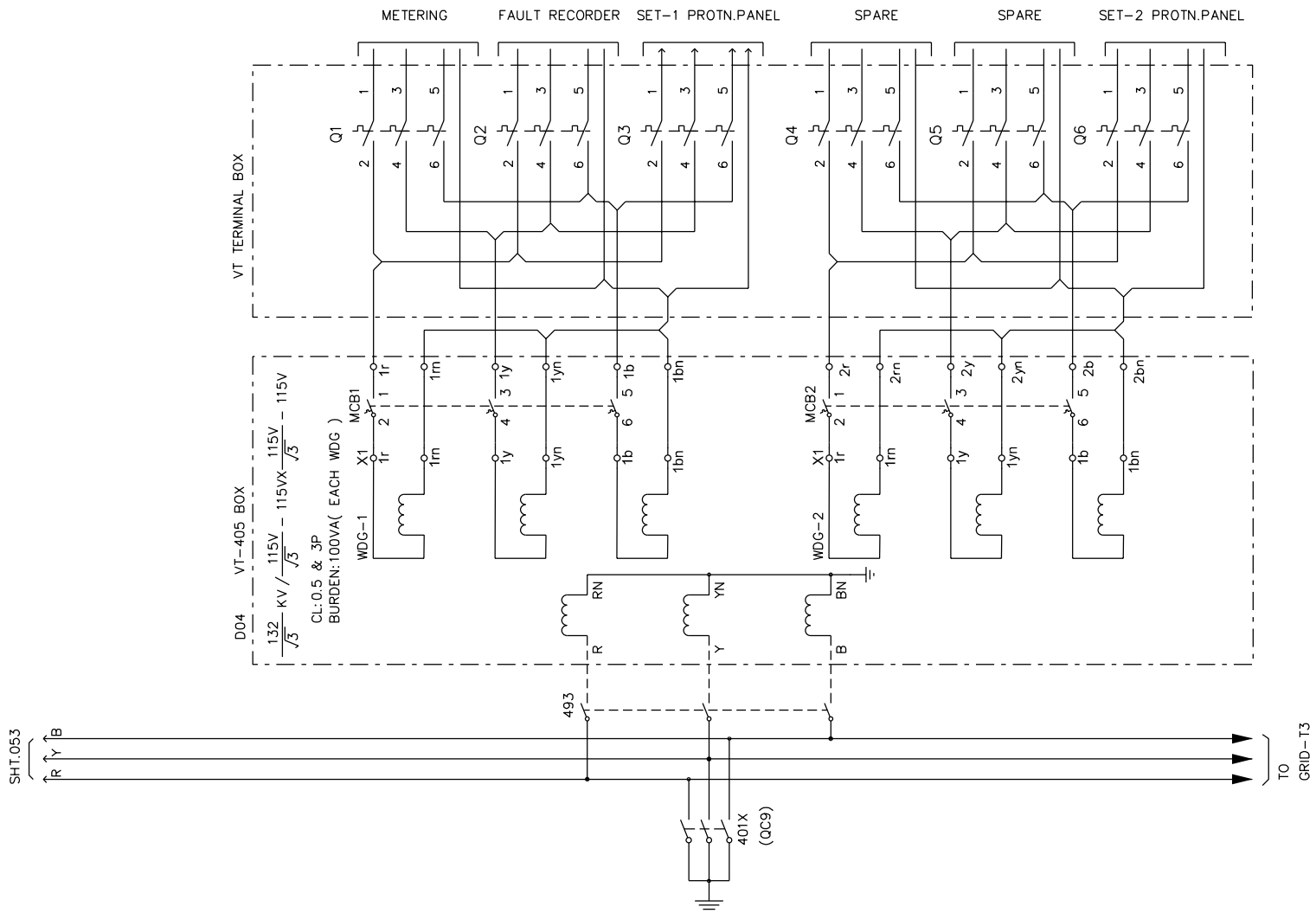

AS-BUILT BY _____ DATE _____	CONTRACT NO. 11131113/00	JOB ORDER NO. S-13656

REV. NO.	DATE	DESCRIPTION
01	13 49	FACTORY ASBUILT
00	13 05	FOR APPROVAL

DRAWN BY RIZ CHECKED BY KVR
DATE STARTED 30.01.2013 DATE COMPLETED _____
OPRG. DEPT. CTPD ENG. DEPT. AUT-PSAC

PRIMARY SYSTEM (TRANSFORMER- GT3 BAY-D04)
132KV BUSBAR PROTN.MAIN-2 BU PANEL +BBP2-5
S/S 8709 - 132/13.8KV IN AL-KHARJ CITY
RIYADH SAUDI ARABIA

الشركة الوطنية لنقل الكهرباء
نقل الكهرباء
National Grid SA

INDEX	PLANT NO.	DRAWING NUMBER	SHEET NO. SHT	SHEET NO. CONT.	REV. NO.
-	C421	CD-323009	054	055	01

NG/D2-D (2012/01)
DMS VECTOR NGD200

THIS DRAWING AND THE INFORMATION CONTAINED HEREIN ARE THE SOLE PROPERTY OF NationalGrid SA NO REPRODUCTION IN FULL OR IN PART SHALL BE OBTAINED FROM THIS DOCUMENT WITHOUT THE WRITTEN CONSENT OF ITS OWNER.

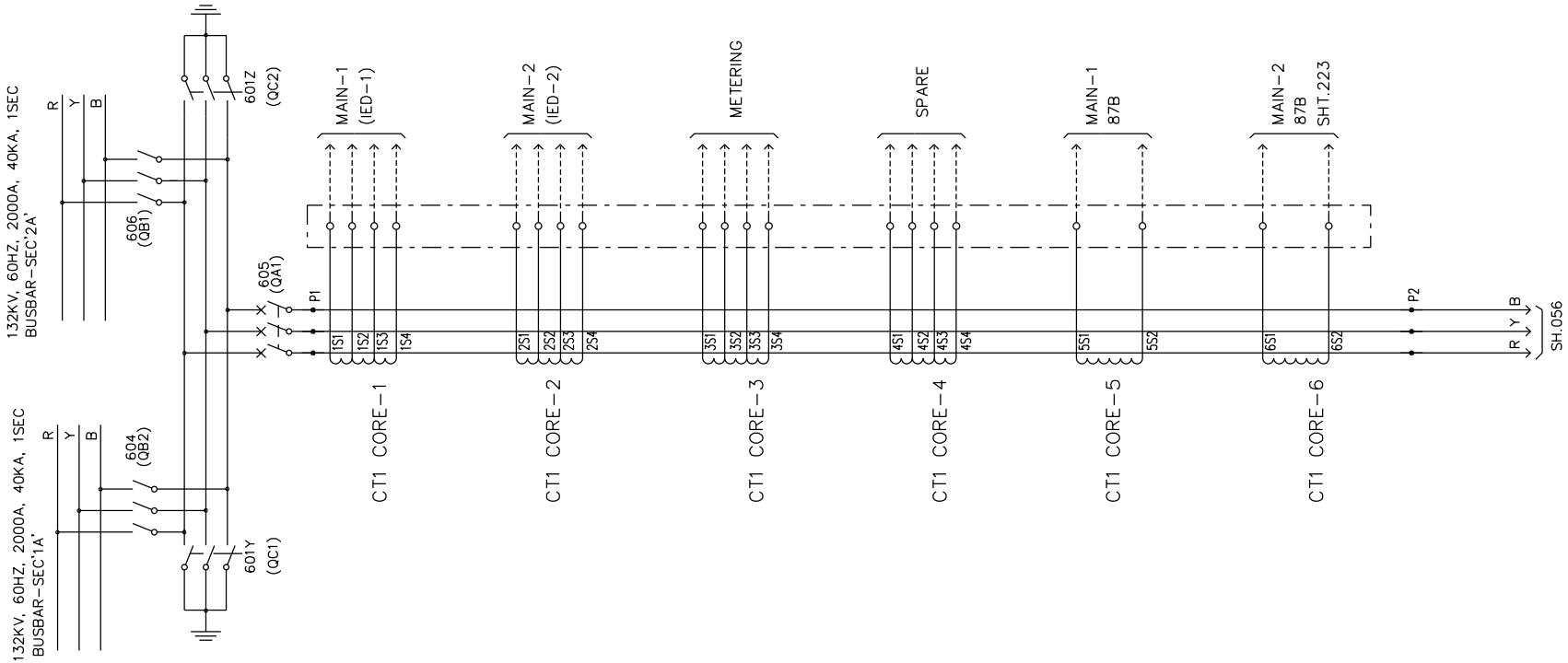

CT	RATIO	CLASS	VK IN VOLTS	IMAG @ VK IN mA	RCT IN (OHMS)	BURDEN IN VA	FUNCTION
CT1-1	1600-1200-800/1A	X	>1400	≤100	≤2	–	MAIN-1(IED-1)
CT1-2	1600-1200-800/1A	X	>1400	≤100	≤2	–	MAIN-2(IED-2)
CT1-3	1600-1200-800/1A	X	>1400	≤100	≤2	–	METERING
CT1-4	1600-1200-800/1A	X	>1400	≤100	≤2	–	SPARE
CT1-5	2000/1A	X	>600	≤25	≤5	–	87B MAIN-1
CT1-6	2000/1A	X	>600	≤25	≤5	–	87B MAIN-2

AS-BUILT BY _____ DATE _____ | CONTRACT NO. 11131113/00 | JOB ORDER NO. S-13656

REV. NO.	DATE	DESCRIPTION
01	13 49	FACTORY ASBUILT
00	13 05	FOR APPROVAL

DRAWN BY RIZ CHECKED BY KVR
DATE STARTED 30.01.2013 DATE COMPLETED _____
OPRG. DEPT. CTPD ENG. DEPT. AUT-PSAC

PRIMARY SYSTEM (SPARE-2 UGF BAY-D06)
132KV BUSBAR PROTN.MAIN-2 BU PANEL +BBP2-5
S/S 8709 - 132/13.8KV IN AL-KHARJ CITY
RIYADH SAUDI ARABIA

الشركة الوطنية لنقل الكهرباء
نقل الكهرباء
National Grid SA

INDEX	PLANT NO.	DRAWING NUMBER	SHEET NO. SHT	SHEET NO. CONT.	REV. NO.
-	C421	CD-323009	055	056	01

NG/D2-D (2012/01)
DMS VECTOR NGD200

THIS DRAWING AND THE INFORMATION CONTAINED HEREIN ARE THE SOLE PROPERTY OF NationalGrid SA NO REPRODUCTION IN FULL OR IN PART SHALL BE OBTAINED FROM THIS DOCUMENT WITHOUT THE WRITTEN CONSENT OF ITS OWNER.

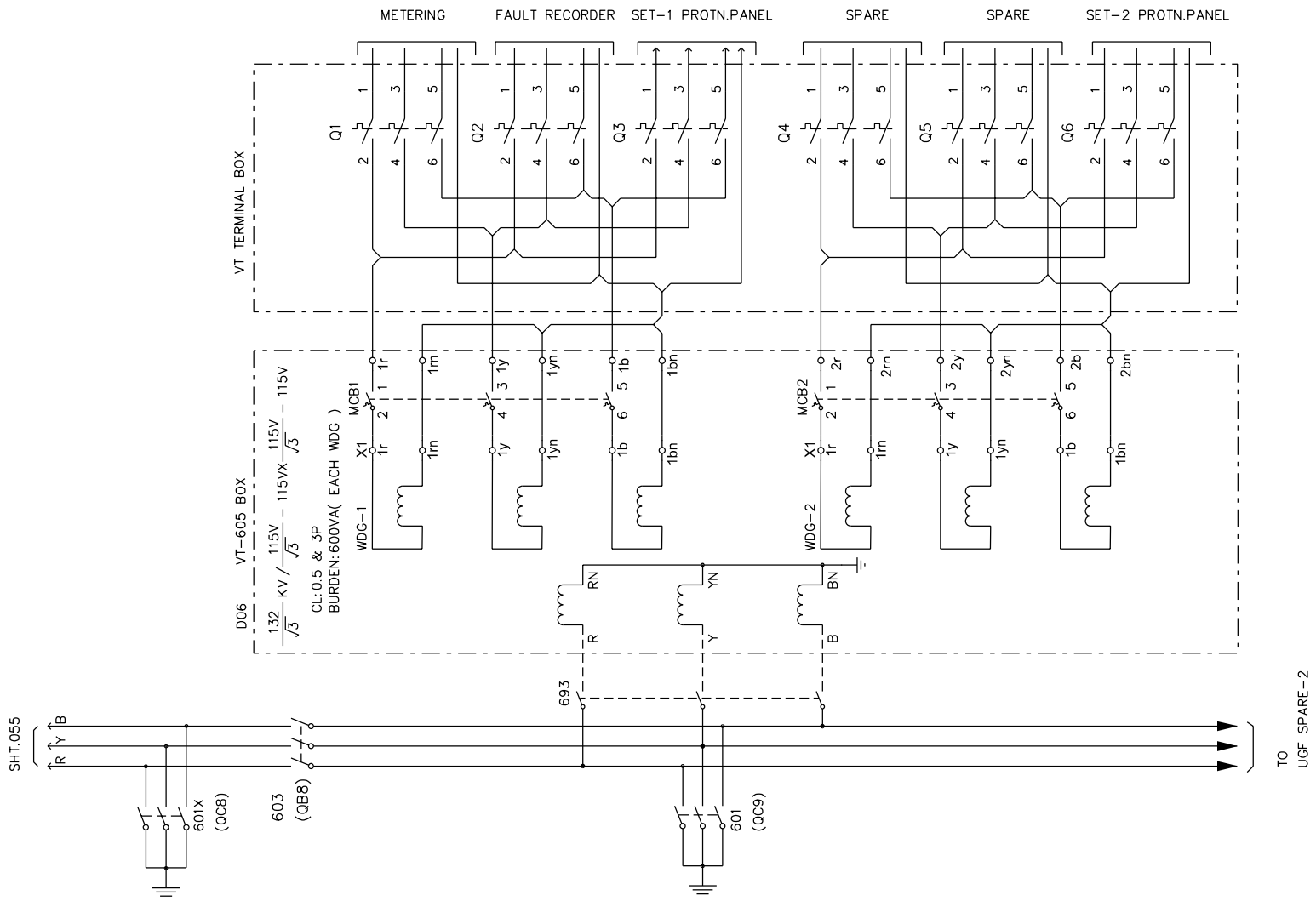

AS-BUILT BY _____ DATE _____	CONTRACT NO. 11131113/00	JOB ORDER NO. S-13656

REV. NO.	DATE	DESCRIPTION
01	13 49	FACTORY ASBUILT
00	13 05	FOR APPROVAL

DRAWN BY RIZ CHECKED BY KVR
DATE STARTED 30.01.2013 DATE COMPLETED _____
OPRG. DEPT. CTPD ENG. DEPT. AUT-PSAC

PRIMARY SYSTEM (SPARE-2 UGF BAY-D06)
132KV BUSBAR PROTN.MAIN-2 BU PANEL +BBP2-5
S/S 8709 - 132/13.8KV IN AL-KHARJ CITY
RIYADH SAUDI ARABIA

الشركة الوطنية لنقل الكهرباء
نقل الكهرباء
National Grid SA

INDEX	PLANT NO.	DRAWING NUMBER	SHEET NO. SHT	SHEET NO. CONT.	REV. NO.
-	C421	CD-323009	056	211	01

NG/D2-D (2012/01)
DMS VECTOR NGD200

THIS DRAWING AND THE INFORMATION CONTAINED HEREIN ARE THE SOLE PROPERTY OF NationalGrid SA NO REPRODUCTION IN FULL OR IN PART SHALL BE OBTAINED FROM THIS DOCUMENT WITHOUT THE WRITTEN CONSENT OF ITS OWNER.

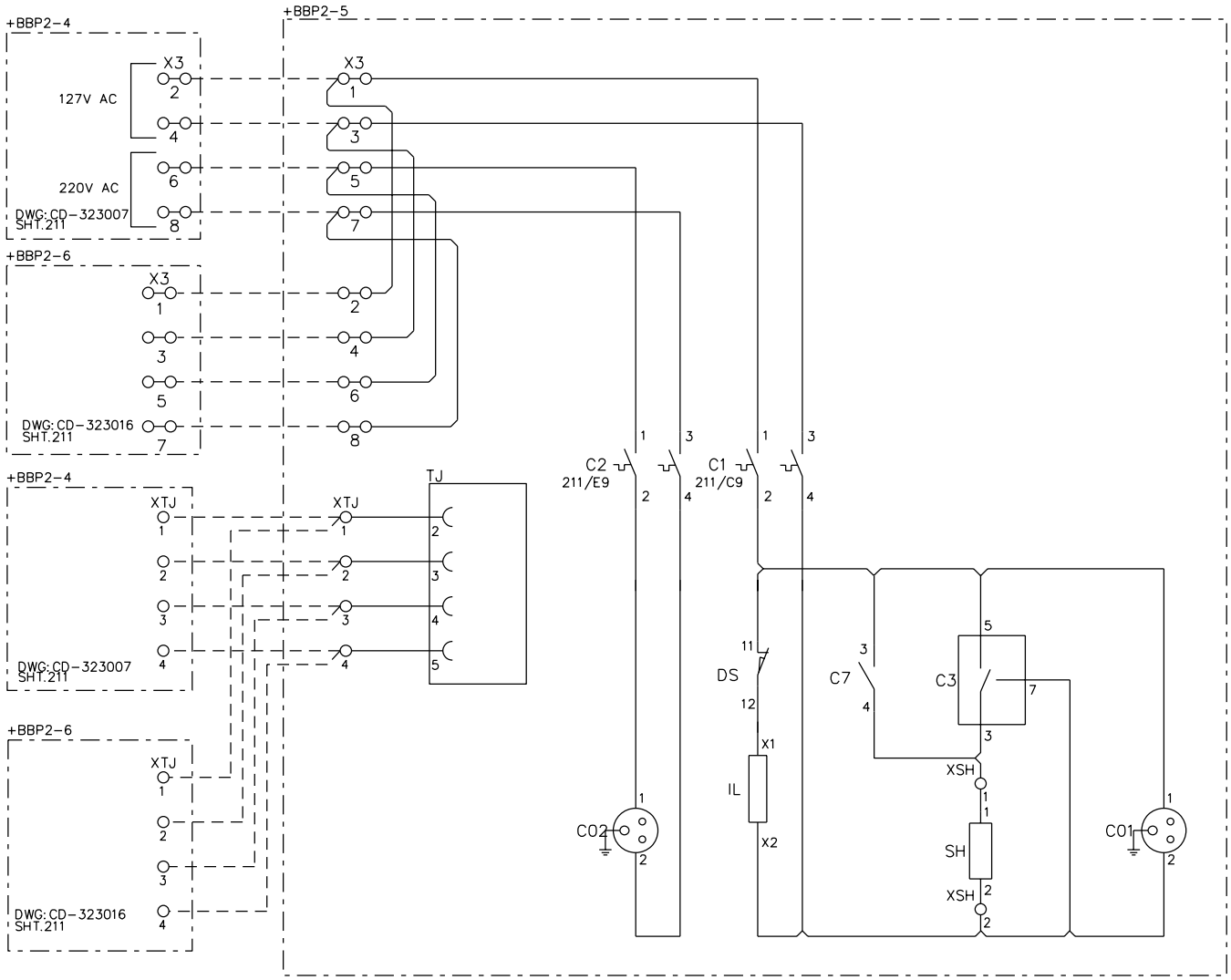

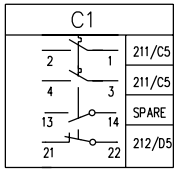

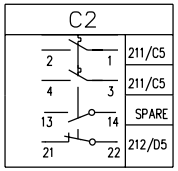

01	13 49	FACTORY ASBUILT
00	13 05	FOR APPROVAL
REV. NO.	DATE	DESCRIPTION

AS-BUILT BY _____ DATE _____

CONTRACT NO. 11131113/00 | JOB ORDER NO. S-13656

DRAWN BY RIZ CHECKED BY KVR

DATE STARTED 30.01.2013 DATE COMPLETED _____

OPRG. DEPT. CTPD ENG. DEPT. AUT-PSAC

AC SUPPLY FOR ILLUMINATION &POWER SOCKET
132KV BUSBAR PROTN.MAIN-2 BU PANEL +BBP2-5
S/S 8709 - 132/13.8KV IN AL-KHARJ CITY
RIYADH SAUDI ARABIA

الشركة الوطنية لنقل الكهرباء
نقل الكهرباء
National Grid SA

INDEX	PLANT NO.	DRAWING NUMBER	SHEET NO. SHT	SHEET NO. CONT.	REV. NO.
-	C421	CD-323009	211	212	01

NG/D2-D (2012/01)
DMS VECTOR NGD200

THIS DRAWING AND THE INFORMATION CONTAINED HEREIN ARE THE SOLE PROPERTY OF NationalGrid SA NO REPRODUCTION IN FULL OR IN PART SHALL BE OBTAINED FROM THIS DOCUMENT WITHOUT THE WRITTEN CONSENT OF ITS OWNER.

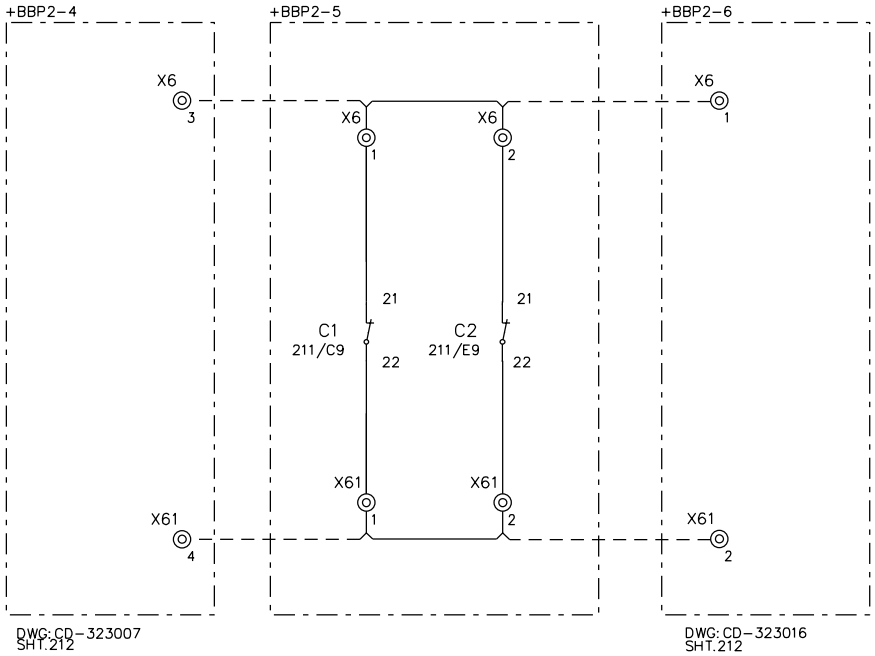

AS-BUILT BY _____ DATE _____	CONTRACT NO. 11131113/00	JOB ORDER NO. S-13656	CUB.LIGHTING,HEATER&SOKET ALARM CKT.	الشركة الوطنية لنقل الكهرباء	نقل الكهرباء National Grid SA
01 13 49 FACTORY ASBUILT	DRAWN BY RIZ	CHECKED BY KVR	132KV BUSBAR PROTN.MAIN-2 BU PANEL +BBP2-5		
00 13 05 FOR APPROVAL	DATE STARTED 30.01.2013	DATE COMPLETED _____	S/S 8709 - 132/13.8KV IN AL-KHARJ CITY		
REV. NO. / DATE / DESCRIPTION	OPRG. DEPT. CTPD	ENG. DEPT. AUT-PSAC	RIYADH SAUDI ARABIA		

INDEX	PLANT NO.	DRAWING NUMBER	SHEET NO. SHT	SHEET NO. CONT.	REV. NO.
-	C421	CD-323009	212	216	01

NG/D2-D (2012/01)

DMS VECTOR NGD200

THIS DRAWING AND THE INFORMATION CONTAINED HEREIN ARE THE SOLE PROPERTY OF NationalGrid SA NO REPRODUCTION IN FULL OR IN PART SHALL BE OBTAINED FROM THIS DOCUMENT WITHOUT THE WRITTEN CONSENT OF ITS OWNER.

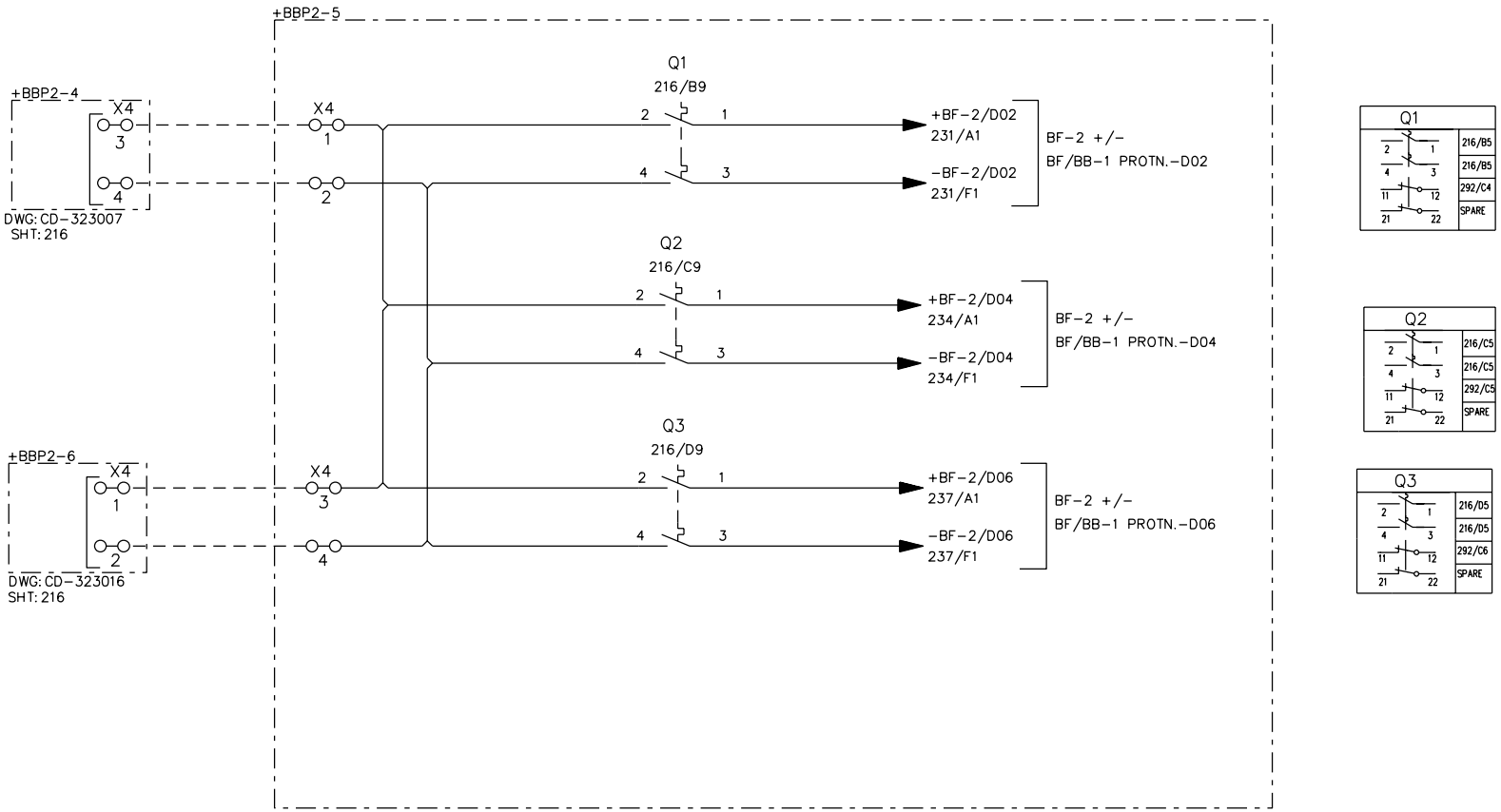

AS-BUILT BY _____ DATE _____	CONTRACT NO. 11131113/00	JOB ORDER NO. S-13656

REV. NO.	DATE	DESCRIPTION
01	13 49	FACTORY ASBUILT
00	13 05	FOR APPROVAL

DRAWN BY RIZ CHECKED BY KVR
DATE STARTED 30.01.2013 DATE COMPLETED _____
OPRG. DEPT. CTPD ENG. DEPT. AUT-PSAC

DC SUPPLY DISTRIBUTION

132KV BUSBAR PROTN.MAIN-2 BU PANEL +BBP2-5

S/S 8709 - 132/13.8KV IN AL-KHARJ CITY

RIYADH SAUDI ARABIA

الشركة الوطنية لنقل الكهرباء

نقل الكهرباء National Grid SA

INDEX	PLANT NO.	DRAWING NUMBER	SHEET NO. SHT	SHEET NO. CONT.	REV. NO.
-	C421	CD-323009	216	221	01

NG/D2-D (2012/01)

DMS VECTOR NGD200

THIS DRAWING AND THE INFORMATION CONTAINED HEREIN ARE THE SOLE PROPERTY OF NationalGrid SA NO REPRODUCTION IN FULL OR IN PART SHALL BE OBTAINED FROM THIS DOCUMENT WITHOUT THE WRITTEN CONSENT OF ITS OWNER.

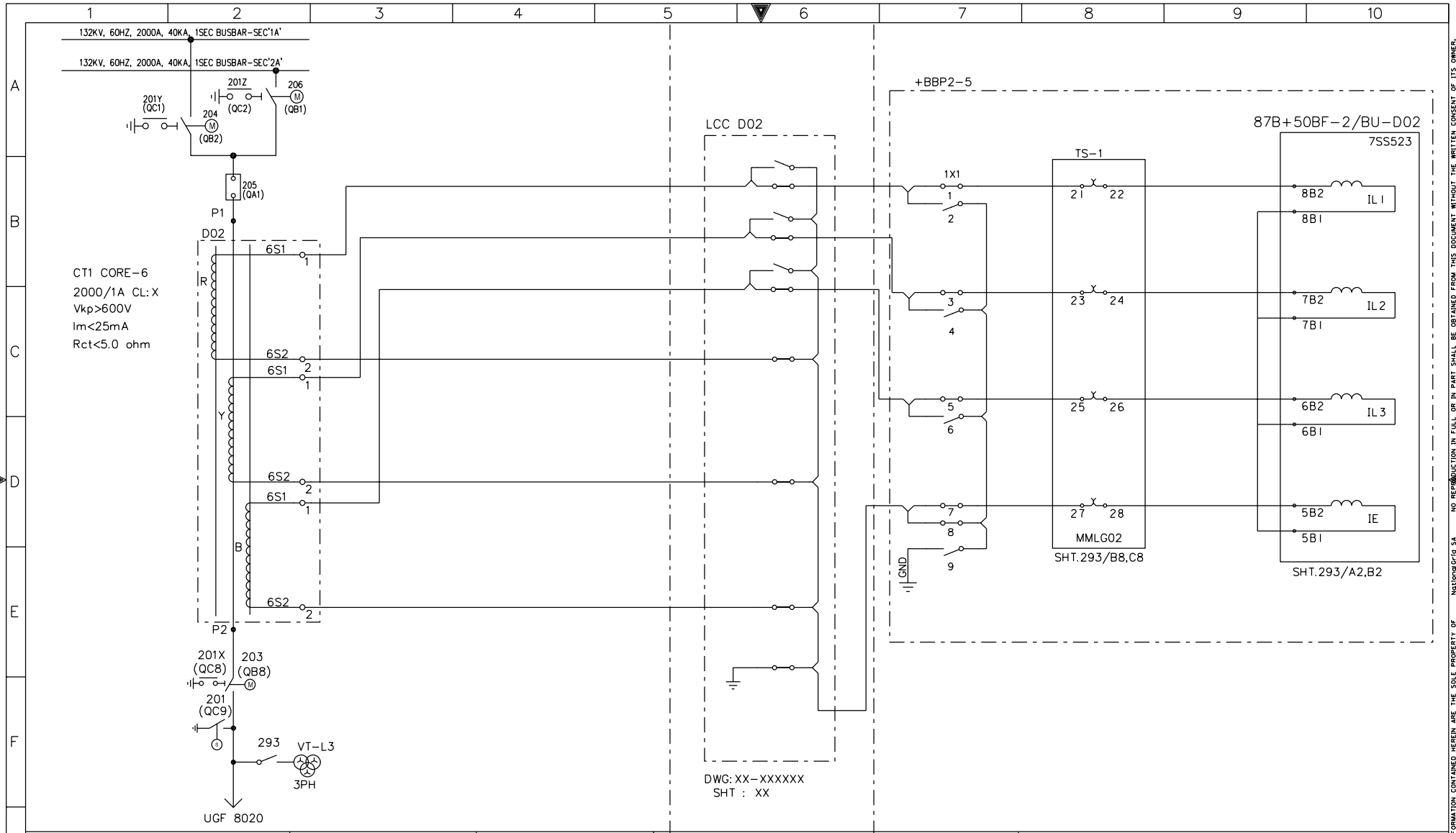

AS-BUILT BY _____ DATE _____	CONTRACT NO. 11131113/00	JOB ORDER NO. S-13656

REV. NO.	DATE	DESCRIPTION
01	13 49	FACTORY ASBUILT
00	13 05	FOR APPROVAL

DRAWN BY RIZ CHECKED BY KVR
DATE STARTED 30.01.2013 DATE COMPLETED _____
OPRG. DEPT. CTPD ENG. DEPT. AUT-PSAC

CURRENT TRANSFORMER INPUTS -87B+50BF-2/BU-D02
132KV BUSBAR PROTN.MAIN-2 BU PANEL +BBP2-5
S/S 8709 - 132/13.8KV IN AL-KHARJ CITY
RIYADH SAUDI ARABIA

الشركة الوطنية لنقل الكهرباء
نقل الكهرباء National Grid SA

INDEX	PLANT NO.	DRAWING NUMBER	SHEET NO. SHT	SHEET NO. CONT.	REV. NO.
-	C421	CD-323009	221	222	01

NG/D2-D (2012/01)
DMS VECTOR NGD200

THIS DRAWING AND THE INFORMATION CONTAINED HEREIN ARE THE SOLE PROPERTY OF NationalGrid SA NO REPRODUCTION IN FULL OR IN PART SHALL BE OBTAINED FROM THIS DOCUMENT WITHOUT THE WRITTEN CONSENT OF ITS OWNER.

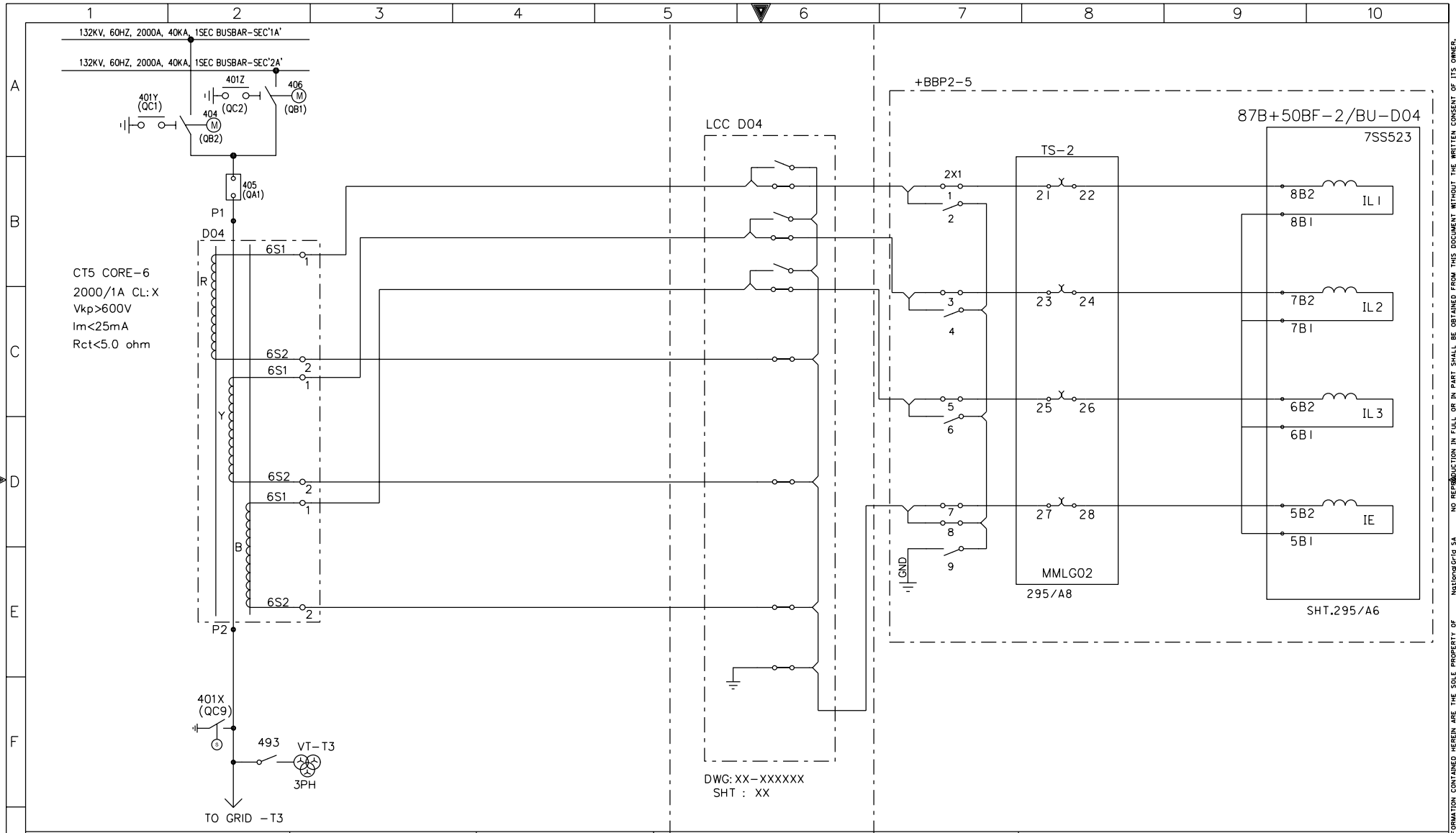

AS-BUILT BY _____ DATE _____	CONTRACT NO. 11131113/00	JOB ORDER NO. S-13656	CURRENT TRANSFORMER INPUTS -87B+50BF-2/BU-D04	الشركة الوطنية لنقل الكهرباء	نقل الكهرباء National Grid SA
			132KV BUSBAR PROTN.MAIN-2 BU PANEL +BBP2-5		
01 / 13 49 / FACTORY ASBUILT	DRAWN BY RIZ	CHECKED BY KVR	S/S 8709 - 132/13.8KV IN AL-KHARJ CITY		
00 / 13 05 / FOR APPROVAL	DATE STARTED 30.01.2013	DATE COMPLETED	RIYADH SAUDI ARABIA		
REV. NO. / DATE / DESCRIPTION	OPRG. DEPT. CTPD	ENG. DEPT. AUT-PSAC			

INDEX	PLANT NO.	DRAWING NUMBER	SHEET NO. SHT	SHEET NO. CONT.	REV. NO.
-	C421	CD-323009	222	223	01

NG/D2-D (2012/01)

DMS VECTOR NGD200

THIS DRAWING AND THE INFORMATION CONTAINED HEREIN ARE THE SOLE PROPERTY OF NationalGrid SA NO REPRODUCTION IN FULL OR IN PART SHALL BE OBTAINED FROM THIS DOCUMENT WITHOUT THE WRITTEN CONSENT OF ITS OWNER.

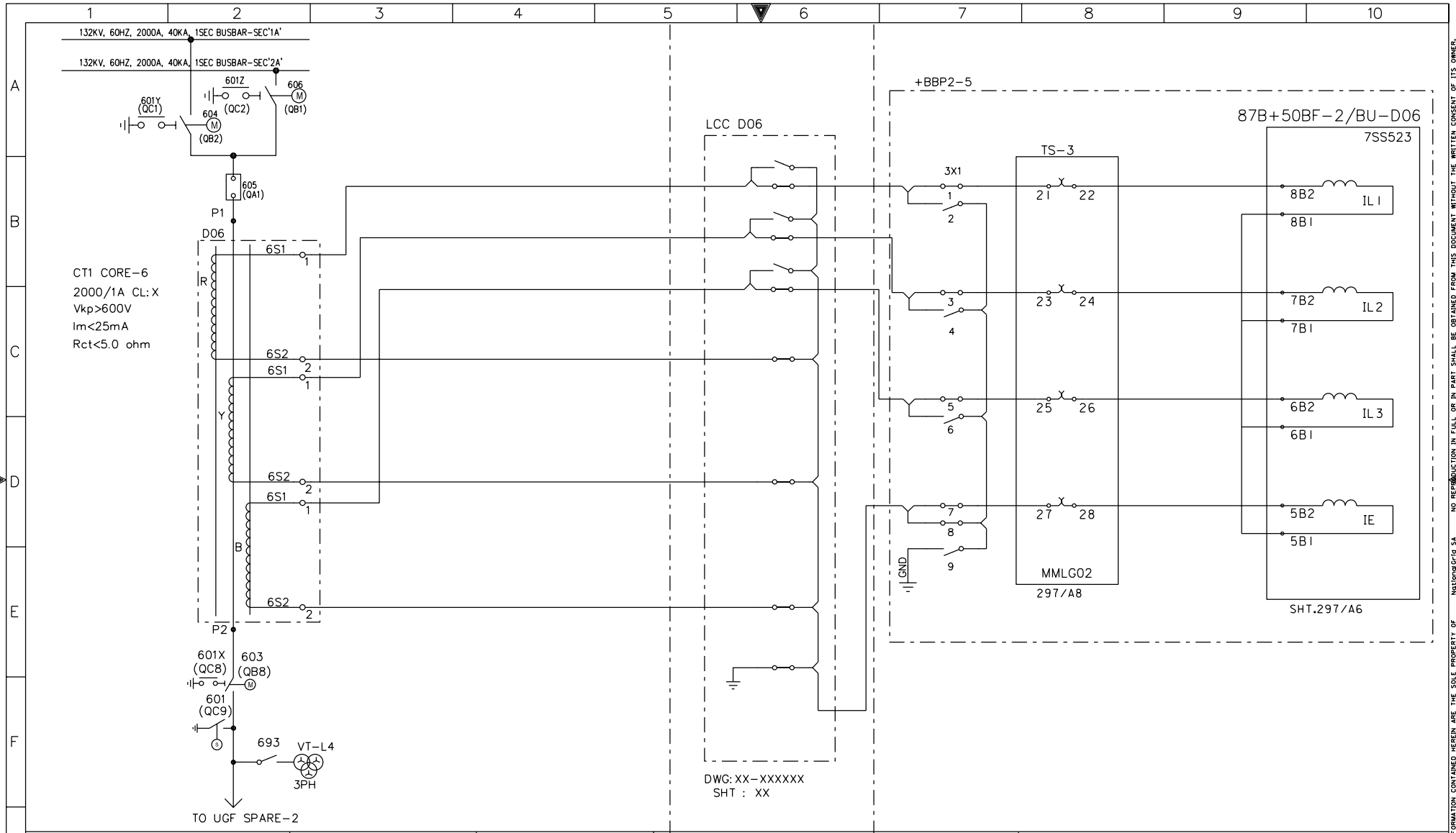

AS-BUILT BY _____ DATE _____	CONTRACT NO. 11131113/00	JOB ORDER NO. S-13656

REV. NO.	DATE	DESCRIPTION
01	13 49	FACTORY ASBUILT
00	13 05	FOR APPROVAL

DRAWN BY RIZ CHECKED BY KVR
DATE STARTED 30.01.2013 DATE COMPLETED _____
OPRG. DEPT. CTPD ENG. DEPT. AUT-PSAC

CURRENT TRANSFORMER INPUTS -87B+50BF-2/BU-D06
132KV BUSBAR PROTN.MAIN-2 BU PANEL +BBP2-5
S/S 8709 - 132/13.8KV IN AL-KHARJ CITY
RIYADH SAUDI ARABIA

الشركة الوطنية لنقل الكهرباء
نقل الكهرباء
National Grid SA

INDEX	PLANT NO.	DRAWING NUMBER	SHEET NO. SHT	SHEET NO. CONT.	REV. NO.
-	C421	CD-323009	223	231	01

NG/D2-D (2012/01)
DMS VECTOR NGD200

THIS DRAWING AND THE INFORMATION CONTAINED HEREIN ARE THE SOLE PROPERTY OF NationalGrid SA NO REPRODUCTION IN FULL OR IN PART SHALL BE OBTAINED FROM THIS DOCUMENT WITHOUT THE WRITTEN CONSENT OF ITS OWNER.

POWER SUPPLY	ISOLATOR STATUS DS-204 CLOSE	DS-204 OPEN	DS-206 CLOSE	DS-206 OPEN	CB STATUS CB-205 CLOSE	CB-205 OPEN	CB CLOSE COMMAND	CB NOT READY	SPARE	SPARE	SPARE	SPARE

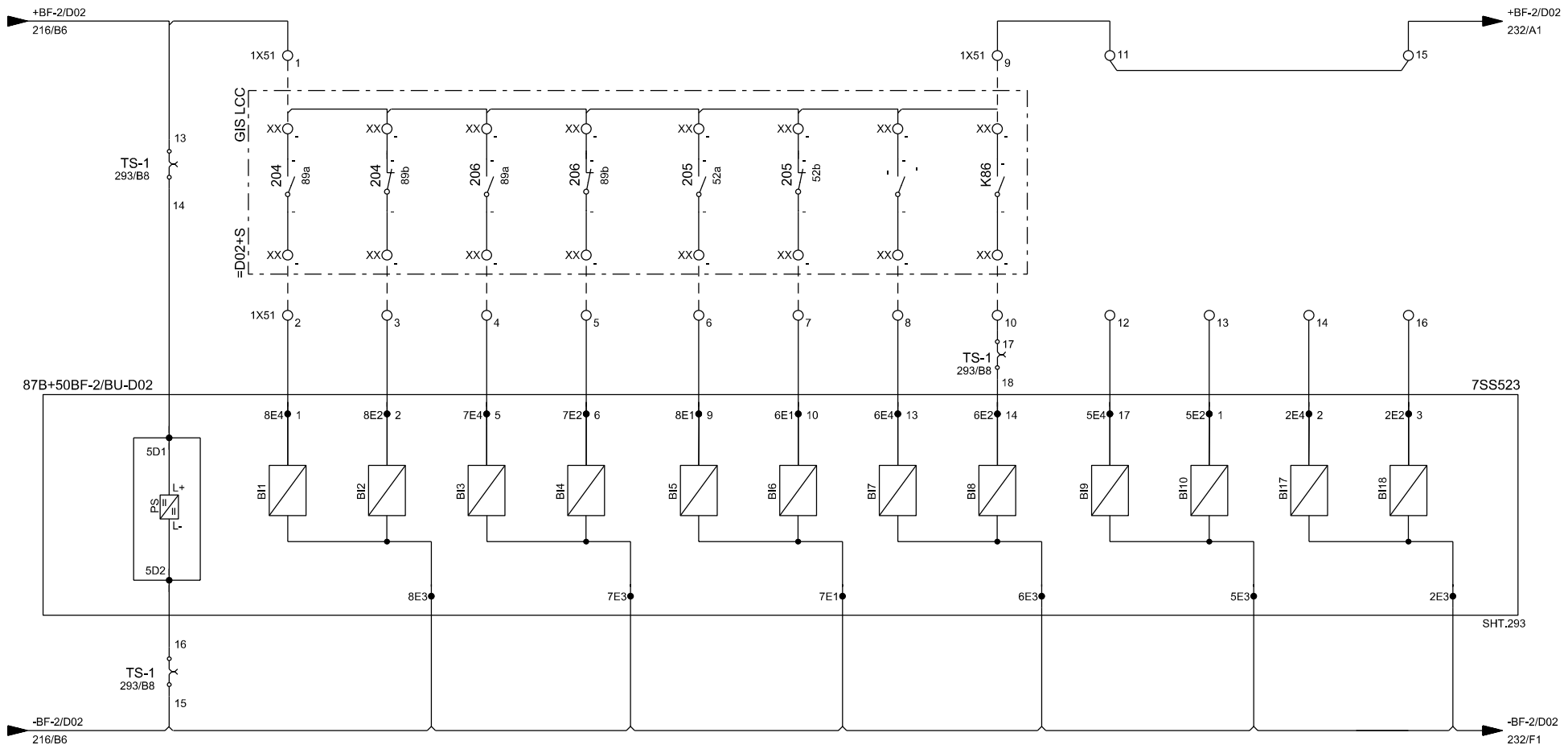

REV. NO.	DATE	DESCRIPTION
01	13 49	FACTORY ASBUILT
00	13 05	FOR APPROVAL

AS-BUILT BY _____ DATE _____

CONTRACT NO. 11131113/00

JOB ORDER NO. S-13656

DRAWN BY RIZ CHECKED BY KVR

DATE STARTED 30.01.2013 DATE COMPLETED _____

ORGR. DEPT. CTPD ENG. DEPT. AUT-PSAC

87B+50BF-2/BU-D02 PROTN. RELAY - BINARY INPUTS

132KV BUSBAR PROTN.MAIN-2 BU PANEL +BBP2-5

S/S 8709 - 132/13.8KV IN AL-KHARJ CITY

RIYADH SAUDI ARABIA

الشركة الوطنية لنقل الكهرباء

نقل الكهرباء National Grid SA

INDEX	PLANT NO.	DRAWING NUMBER	SHEET NO. SHT	SHEET NO. CONT.	REV. NO.
-	C421	CD-323009	231	232	01

NG/D2-D (2012/01)

DMS VECTOR NGD200

THIS DRAWING AND THE INFORMATION CONTAINED HEREIN ARE THE SOLE PROPERTY OF NationalGrid SA NO REPRODUCTION IN FULL OR IN PART SHALL BE OBTAINED FROM THIS DOCUMENT WITHOUT THE WRITTEN CONSENT OF ITS OWNER.

BF INITIATION		
MAIN-1 & 2		DC SUPPLY
PROTN.		SUPERVISION

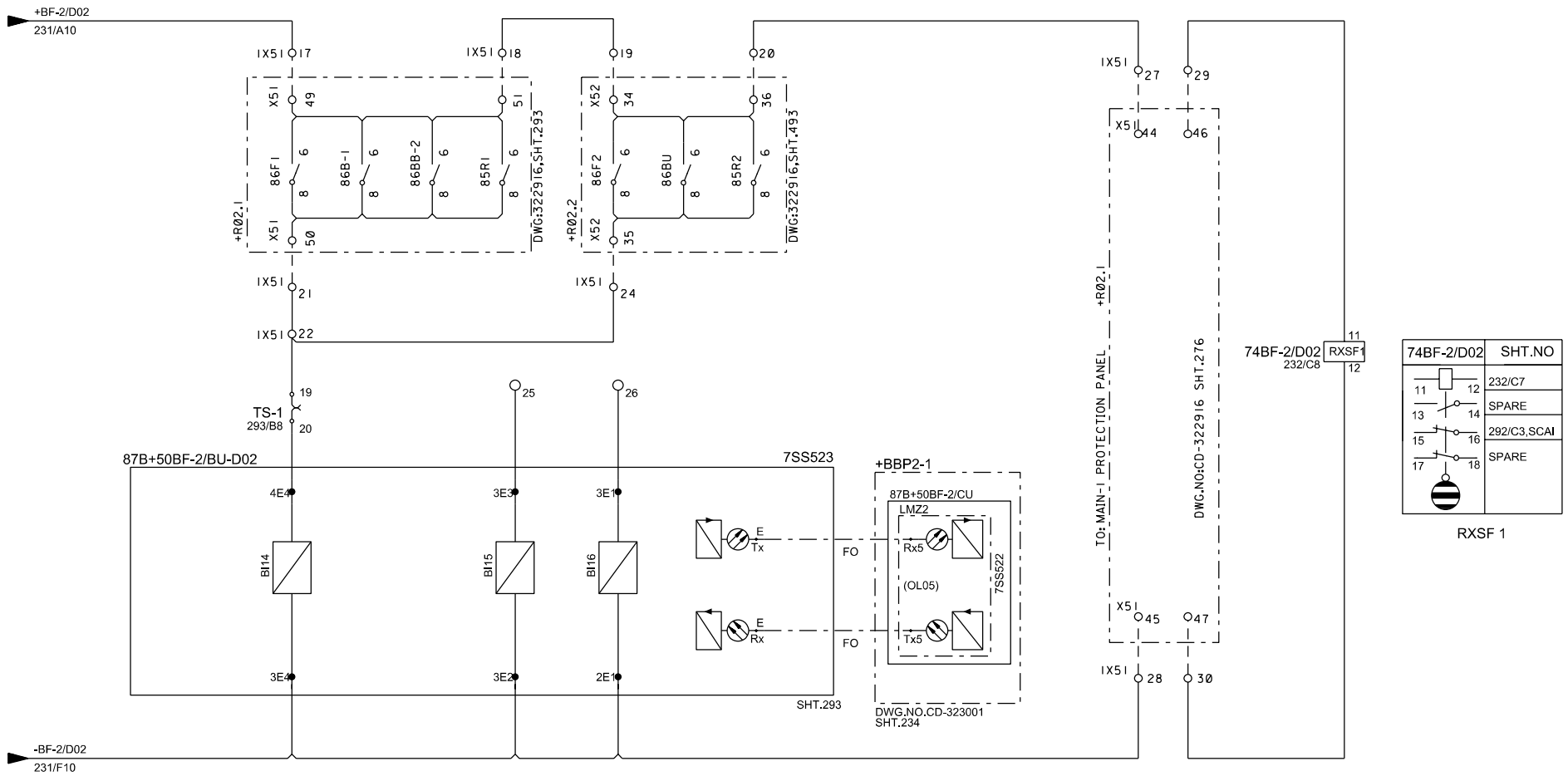

AS-BUILT BY _____ DATE _____	CONTRACT NO. 11131113/00	JOB ORDER NO. S-13656

REV. NO.	DATE	DESCRIPTION
01	13 49	FACTORY ASBUILT
00	13 05	FOR APPROVAL

DRAWN BY RIZ CHECKED BY KVR
DATE STARTED 30.01.2013 DATE COMPLETED _____
OPRG. DEPT. CTPD ENG. DEPT. AUT-PSAC

87B+50BF-2/BU-D02 PROTN. RELAY - BINARY INPUTS
132KV BUSBAR PROTN.MAIN-2 BU PANEL +BBP2-5
S/S 8709 - 132/13.8KV IN AL-KHARJ CITY
RIYADH SAUDI ARABIA

الشركة الوطنية لنقل الكهرباء
نقل الكهرباء
National Grid SA

INDEX	PLANT NO.	DRAWING NUMBER	SHEET NO. SHT	SHEET NO. CONT.	REV. NO.
-	C421	CD-323009	232	233	01

NG/D2-D (2012/01)
DMS VECTOR NGD200

THIS DRAWING AND THE INFORMATION CONTAINED HEREIN ARE THE SOLE PROPERTY OF NationalGrid SA NO REPRODUCTION IN FULL OR IN PART SHALL BE OBTAINED FROM THIS DOCUMENT WITHOUT THE WRITTEN CONSENT OF ITS OWNER.

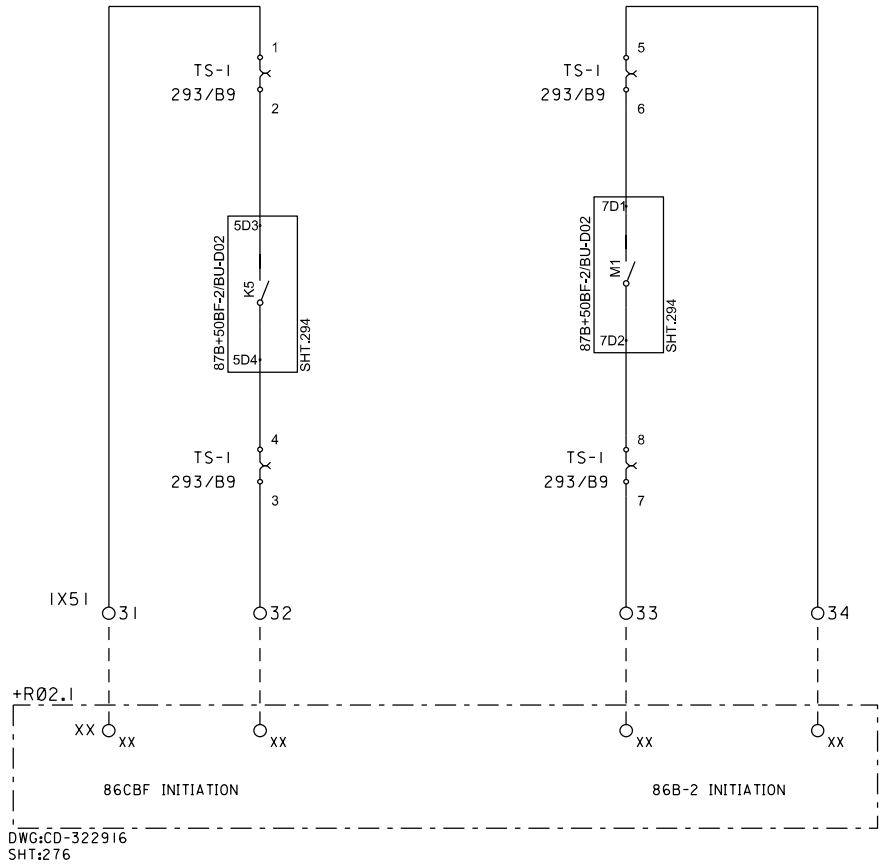

AS-BUILT BY _____ DATE _____	CONTRACT NO. 11131113/00	JOB ORDER NO. S-13656

REV. NO.	DATE	DESCRIPTION
01	13 49	FACTORY ASBUILT
00	13 05	FOR APPROVAL

DRAWN BY RIZ CHECKED BY KVR
DATE STARTED 30.01.2013 DATE COMPLETED _____
OPRG. DEPT. CTPD ENG. DEPT. AUT-PSAC

CBF + BUSBAR PROTN.-2 TRIP RELAY CIRCUIT -D02
132KV BUSBAR PROTN.MAIN-2 BU PANEL +BBP2-5
S/S 8709 - 132/13.8KV IN AL-KHARJ CITY
RIYADH SAUDI ARABIA

الشركة الوطنية لنقل الكهرباء
نقل الكهرباء
National Grid SA

INDEX	PLANT NO.	DRAWING NUMBER	SHEET NO. SHT	SHEET NO. CONT.	REV. NO.
-	C421	CD-323009	233	234	01

NG/D2-D (2012/01)
DMS VECTOR NGD200

THIS DRAWING AND THE INFORMATION CONTAINED HEREIN ARE THE SOLE PROPERTY OF NationalGrid SA NO REPRODUCTION IN FULL OR IN PART SHALL BE OBTAINED FROM THIS DOCUMENT WITHOUT THE WRITTEN CONSENT OF ITS OWNER.

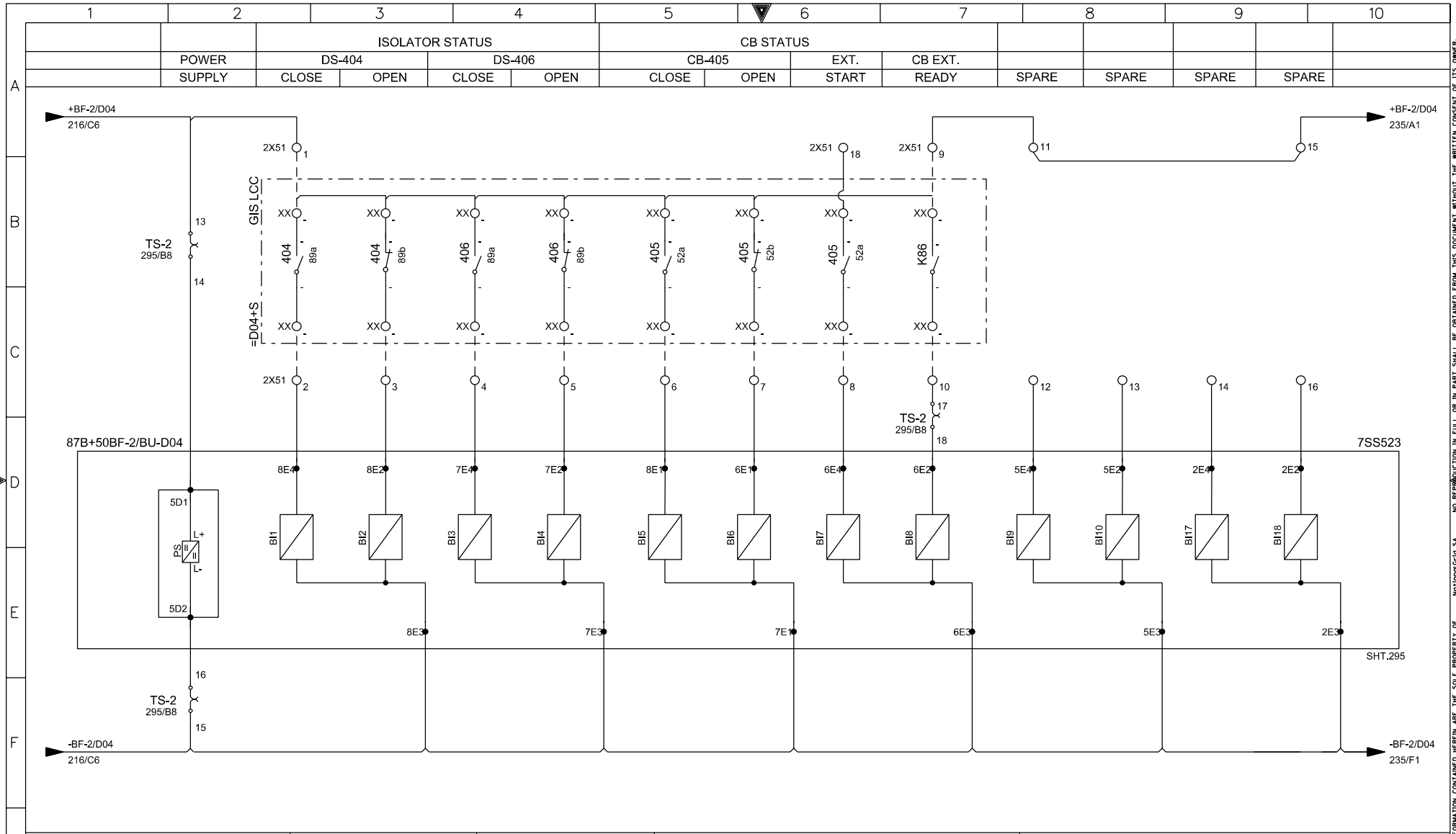

AS-BUILT BY _____ DATE _____	CONTRACT NO. 11131113/00	JOB ORDER NO. S-13656

REV. NO.	DATE	DESCRIPTION
01	13 49	FACTORY ASBUILT
00	13 05	FOR APPROVAL

DRAWN BY RIZ CHECKED BY KVR
DATE STARTED 30.01.2013 DATE COMPLETED
OPRG. DEPT. CTPD ENG. DEPT. AUT-PSAC

87B+50BF-2/BU-D04 PROTN. RELAY - BINARY INPUTS
132KV BUSBAR PROTN.MAIN-2 BU PANEL +BBP2-5
S/S 8709 - 132/13.8KV IN AL-KHARJ CITY
RIYADH SAUDI ARABIA

الشركة الوطنية لنقل الكهرباء
نقل الكهرباء
National Grid SA

INDEX	PLANT NO.	DRAWING NUMBER	SHEET NO. SHT	SHEET NO. CONT.	REV. NO.
-	C421	CD-323009	234	235	01

NG/D2-D (2012/01)
DMS VECTOR NGD200

THIS DRAWING AND THE INFORMATION CONTAINED HEREIN ARE THE SOLE PROPERTY OF NationalGrid SA NO REPRODUCTION IN FULL OR IN PART SHALL BE OBTAINED FROM THIS DOCUMENT WITHOUT THE WRITTEN CONSENT OF ITS OWNER.

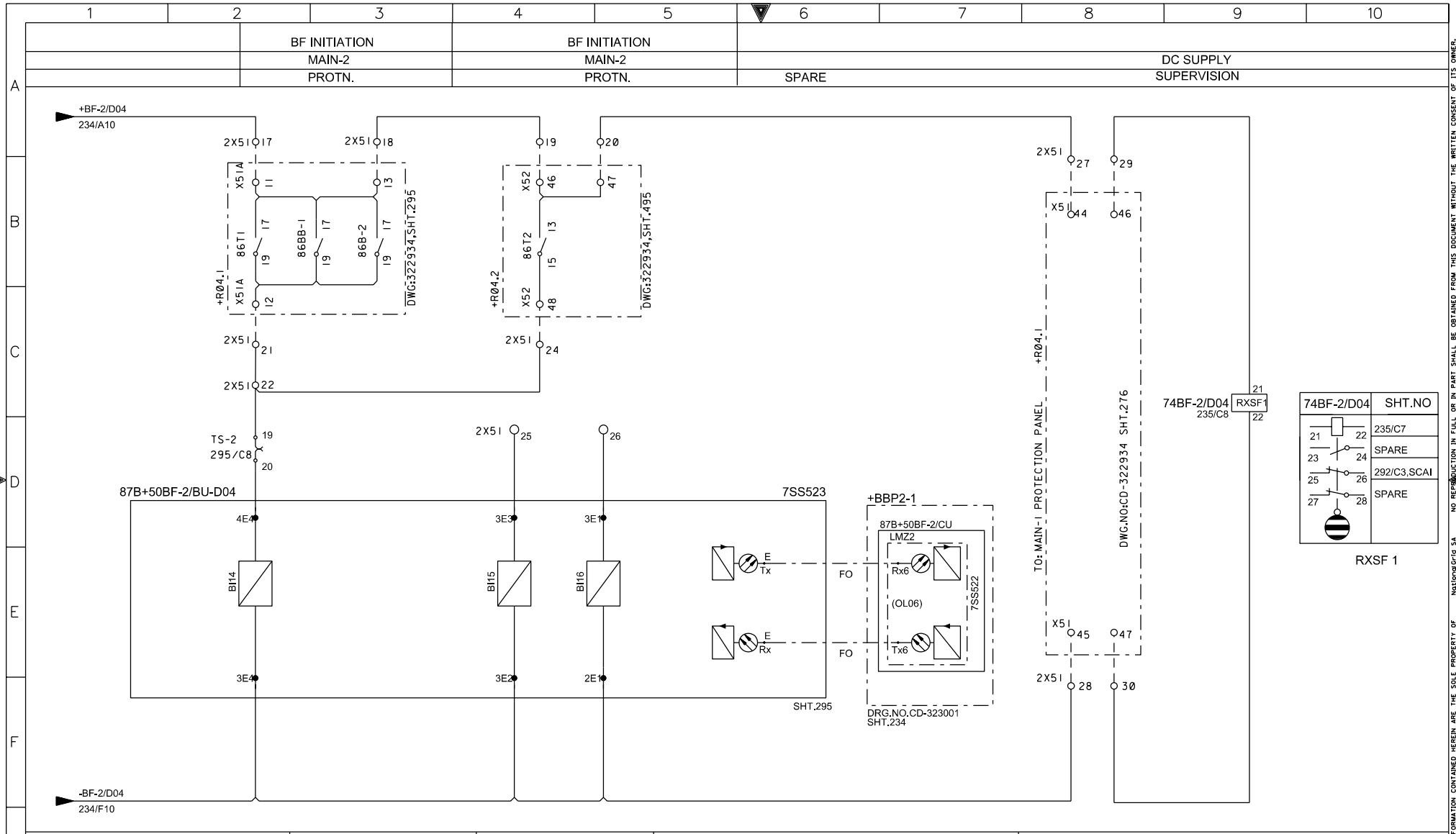

AS-BUILT BY ____ DATE ____	CONTRACT NO. 11131113/00	JOB ORDER NO. S-13656	87B+50BF-2/BU-D04 PROTN. RELAY - BINARY INPUTS	الشركة الوطنية لنقل الكهرباء	نقل الكهرباء National Grid SA
			132KV BUSBAR PROTN.MAIN-2 BU PANEL +BBP2-5		
			S/S 8709 - 132/13.8KV IN AL-KHARJ CITY		
			RIYADH SAUDI ARABIA		

REV. NO.	DATE	DESCRIPTION
01	13 49	FACTORY ASBUILT
00	13 05	FOR APPROVAL

DRAWN BY RIZ CHECKED BY KVR
DATE STARTED 30.01.2013 DATE COMPLETED ____
OPRG. DEPT. CTPD ENG. DEPT. AUT-PSAC

INDEX	PLANT NO.	DRAWING NUMBER	SHEET NO. SHT	SHEET NO. CONT.	REV. NO.
-	C421	CD-323009	235	236	01

NG/D2-D (2012/01)
DMS VECTOR NGD200

THIS DRAWING AND THE INFORMATION CONTAINED HEREIN ARE THE SOLE PROPERTY OF NationalGrid SA NO REPRODUCTION IN FULL OR IN PART SHALL BE OBTAINED FROM THIS DOCUMENT WITHOUT THE WRITTEN CONSENT OF ITS OWNER.

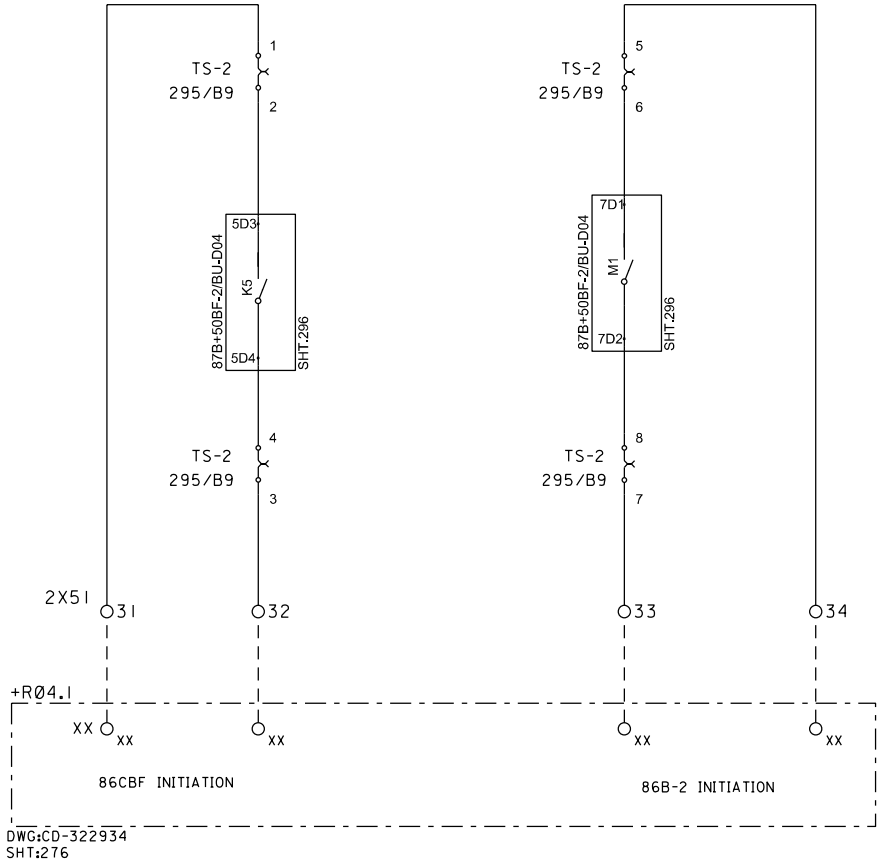

AS-BUILT BY _____ DATE _____	CONTRACT NO. 11131113/00	JOB ORDER NO. S-13656

REV. NO.	DATE	DESCRIPTION
01	13 49	FACTORY ASBUILT
00	13 05	FOR APPROVAL

DRAWN BY RIZ CHECKED BY KVR
DATE STARTED 30.01.2013 DATE COMPLETED _____
OPRG. DEPT. CTPD ENG. DEPT. AUT-PSAC

CBF + BUSBAR PROTN.-2 TRIP RELAY CIRCUIT -D04
132KV BUSBAR PROTN.MAIN-2 BU PANEL +BBP2-5
S/S 8709 - 132/13.8KV IN AL-KHARJ CITY
RIYADH SAUDI ARABIA

الشركة الوطنية لنقل الكهرباء
نقل الكهرباء
National Grid SA

INDEX	PLANT NO.	DRAWING NUMBER	SHEET NO. SHT	SHEET NO. CONT.	REV. NO.
-	C421	CD-323009	236	237	01

NG/D2-D (2012/01)
DMS VECTOR NGD200

THIS DRAWING AND THE INFORMATION CONTAINED HEREIN ARE THE SOLE PROPERTY OF NationalGrid SA NO REPRODUCTION IN FULL OR IN PART SHALL BE OBTAINED FROM THIS DOCUMENT WITHOUT THE WRITTEN CONSENT OF ITS OWNER.

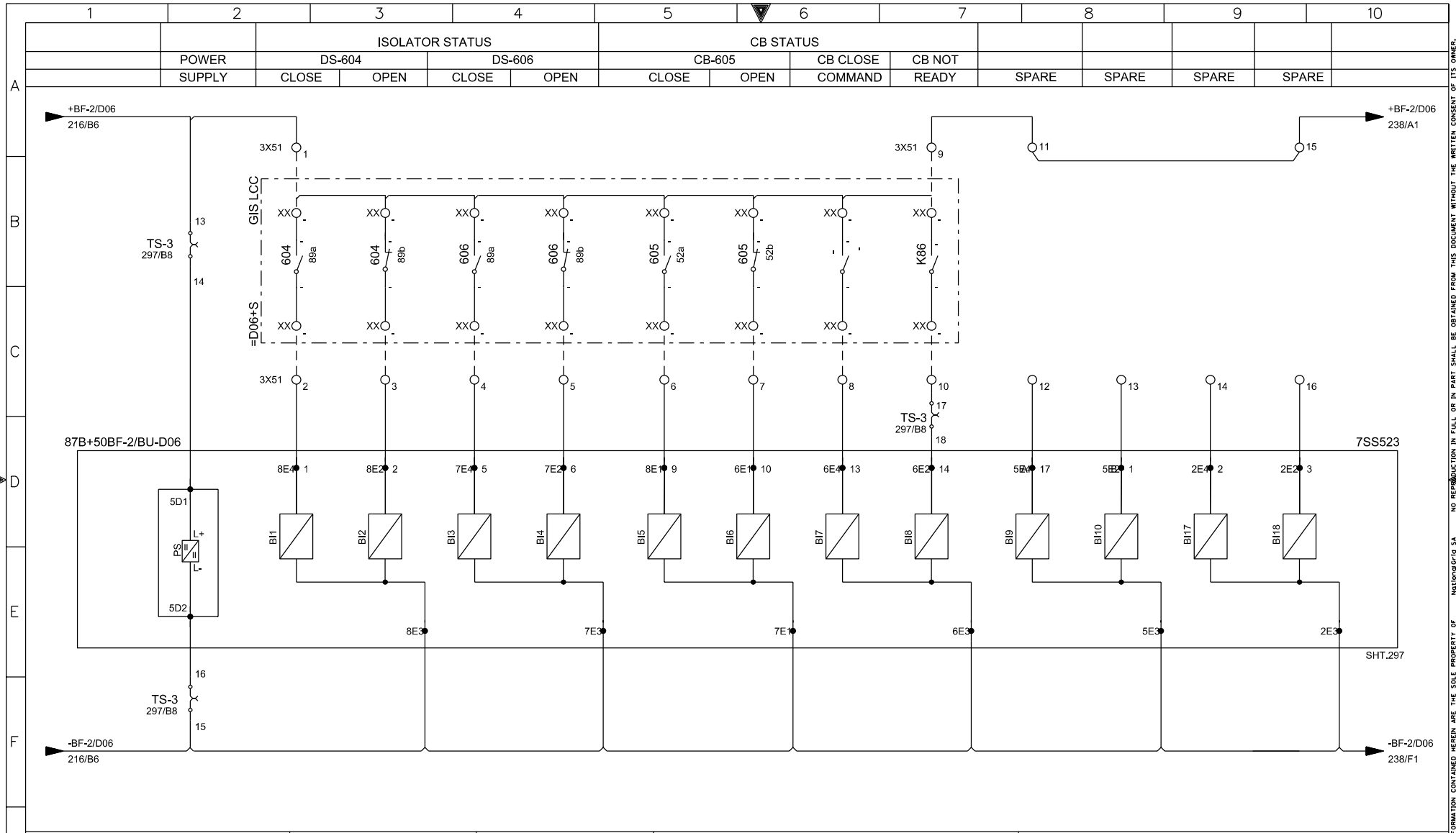

AS-BUILT BY _____ DATE _____

CONTRACT NO. 11131113/00

JOB ORDER NO. S-13656

REV. NO.	DATE	DESCRIPTION
01	13 49	FACTORY ASBUILT
00	13 05	FOR APPROVAL

DRAWN BY RIZ CHECKED BY KVR

DATE STARTED 30.01.2013 DATE COMPLETED _____

OPRG. DEPT. CTPD ENG. DEPT. AUT-PSAC

87B+50BF-2/BU-D06 PROTN. RELAY - BINARY INPUTS

132KV BUSBAR PROTN.MAIN-2 BU PANEL +BBP2-5

S/S 8709 - 132/13.8KV IN AL-KHARJ CITY

RIYADH SAUDI ARABIA

الشركة الوطنية لنقل الكهرباء

نقل الكهرباء National Grid SA

INDEX	PLANT NO.	DRAWING NUMBER	SHEET NO. SHT	SHEET NO. CONT.	REV. NO.
-	C421	CD-323009	237	238	01

NG/D2-D (2012/01)

DMS VECTOR NGD200

THIS DRAWING AND THE INFORMATION CONTAINED HEREIN ARE THE SOLE PROPERTY OF NationalGrid SA NO REPRODUCTION IN FULL OR IN PART SHALL BE OBTAINED FROM THIS DOCUMENT WITHOUT THE WRITTEN CONSENT OF ITS OWNER.

BF INITIATION		
MAIN-1 & 2		DC SUPPLY
PROTN.	SPARE	SUPERVISION

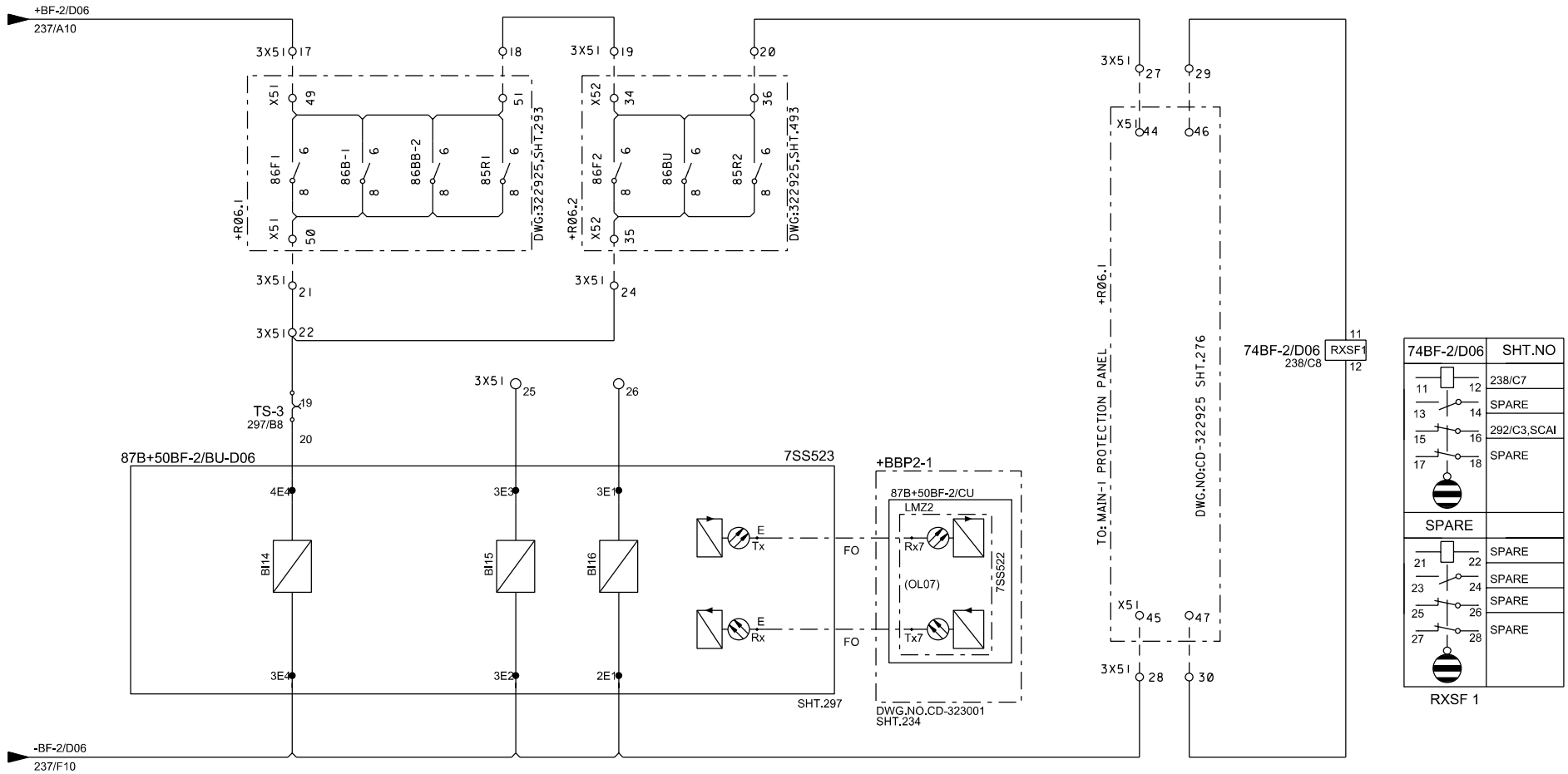

REV. NO.	DATE	DESCRIPTION
01	13 49	FACTORY ASBUILT
00	13 05	FOR APPROVAL

AS-BUILT BY _____ DATE _____ | CONTRACT NO. 11131113/00 | JOB ORDER NO. S-13656

DRAWN BY RIZ CHECKED BY KVR

DATE STARTED 30.01.2013 DATE COMPLETED _____

OPRG. DEPT. CTPD ENG. DEPT. AUT-PSAC

87B+50BF-2/BU-D06 PROTN. RELAY - BINARY INPUTS

132KV BUSBAR PROTN.MAIN-2 BU PANEL +BBP2-5

S/S 8709 - 132/13.8KV IN AL-KHARJ CITY

RIYADH SAUDI ARABIA

الشركة الوطنية لنقل الكهرباء

نقل الكهرباء National Grid SA

INDEX	PLANT NO.	DRAWING NUMBER	SHEET NO. SHT	SHEET NO. CONT.	REV. NO.
-	C421	CD-323009	238	239	01

NG/D2-D (2012/01)

DMS VECTOR NGD200

THIS DRAWING AND THE INFORMATION CONTAINED HEREIN ARE THE SOLE PROPERTY OF NationalGrid SA NO REPRODUCTION IN FULL OR IN PART SHALL BE OBTAINED FROM THIS DOCUMENT WITHOUT THE WRITTEN CONSENT OF ITS OWNER.

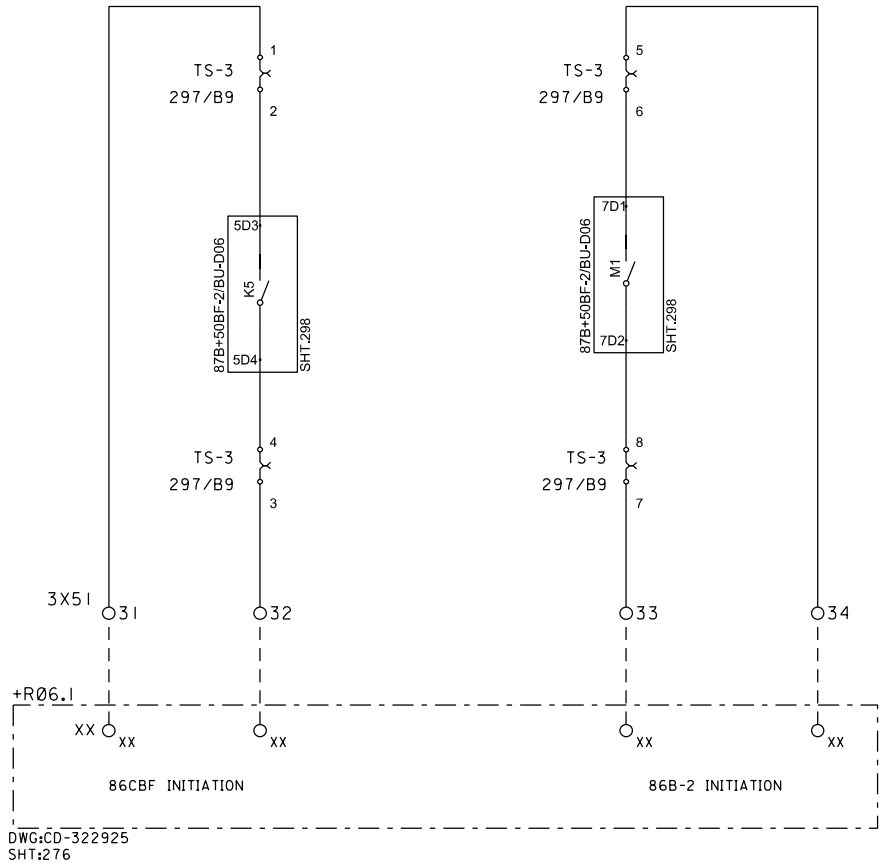

AS-BUILT BY _____ DATE _____	CONTRACT NO. 11131113/00	JOB ORDER NO. S-13656

REV. NO.	DATE	DESCRIPTION
01	13 49	FACTORY ASBUILT
00	13 05	FOR APPROVAL

DRAWN BY RIZ CHECKED BY KVR
DATE STARTED 30.01.2013 DATE COMPLETED _____
OPRG. DEPT. CTPD ENG. DEPT. AUT-PSAC

CBF + BUSBAR PROTN.-2 TRIP RELAY CIRCUIT -D06
132KV BUSBAR PROTN.MAIN-2 BU PANEL +BBP2-5
S/S 8709 - 132/13.8KV IN AL-KHARJ CITY
RIYADH SAUDI ARABIA

الشركة الوطنية لنقل الكهرباء
نقل الكهرباء
National Grid SA

INDEX	PLANT NO.	DRAWING NUMBER	SHEET NO. SHT	SHEET NO. CONT.	REV. NO.
-	C421	CD-323009	239	292	01

NG/D2-D (2012/01)
DMS VECTOR NGD200

THIS DRAWING AND THE INFORMATION CONTAINED HEREIN ARE THE SOLE PROPERTY OF NationalGrid SA NO REPRODUCTION IN FULL OR IN PART SHALL BE OBTAINED FROM THIS DOCUMENT WITHOUT THE WRITTEN CONSENT OF ITS OWNER.

DC SUPPLY FAULTY	87B+50BF-2/BU-D02 RELAY FAULTY	87B+50BF-2/BU-D04 RELAY FAULTY	87B+50BF-2/BU-D06 RELAY FAULTY

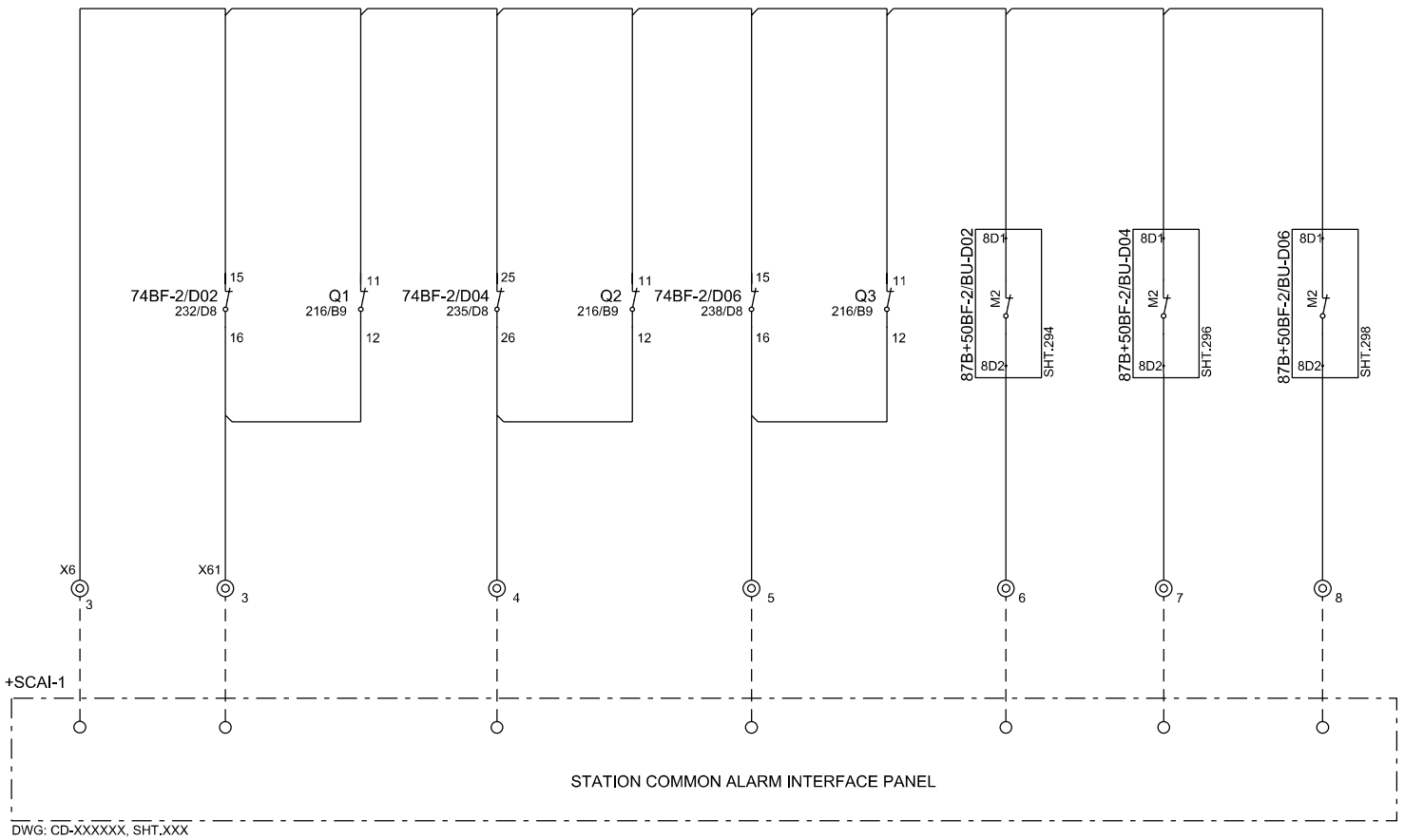

AS-BUILT BY _____ DATE _____ | CONTRACT NO. 11131113/00 | JOB ORDER NO. S-13656

REV. NO.	DATE	DESCRIPTION
01	13 49	FACTORY ASBUILT
00	13 05	FOR APPROVAL

DRAWN BY RIZ CHECKED BY KVR
DATE STARTED 30.01.2013 DATE COMPLETED _____
OPRG. DEPT. CTPD ENG. DEPT. AUT-PSAC

COMMON ALARM CIRCUITS
132KV BUSBAR PROTN.MAIN-2 BU PANEL +BBP2-5
S/S 8709 - 132/13.8KV IN AL-KHARJ CITY
RIYADH SAUDI ARABIA

الشركة الوطنية لنقل الكهرباء
نقل الكهرباء National Grid SA

INDEX	PLANT NO.	DRAWING NUMBER	SHEET NO. SHT	SHEET NO. CONT.	REV. NO.
-	C421	CD-323009	292	293	01

NG/D2-D (2012/01)
DMS VECTOR NGD200

THIS DRAWING AND THE INFORMATION CONTAINED HEREIN ARE THE SOLE PROPERTY OF NationalGrid SA NO REPRODUCTION IN FULL OR IN PART SHALL BE OBTAINED FROM THIS DOCUMENT WITHOUT THE WRITTEN CONSENT OF ITS OWNER.

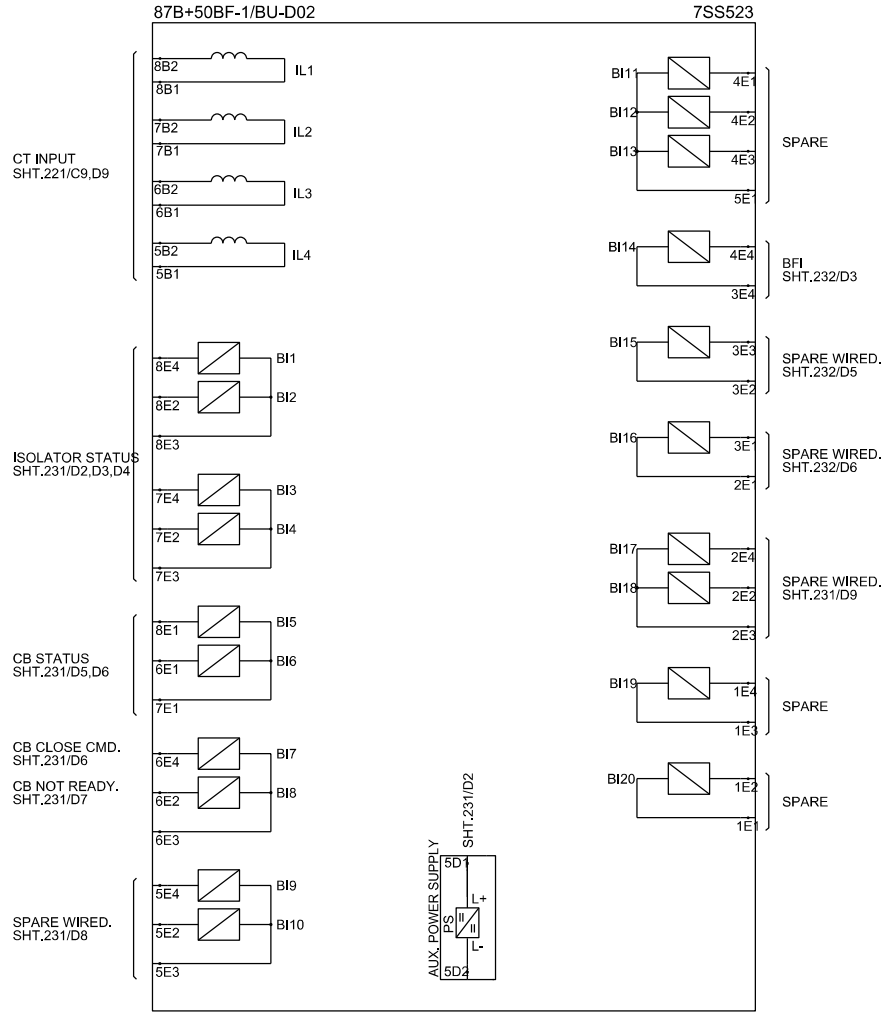

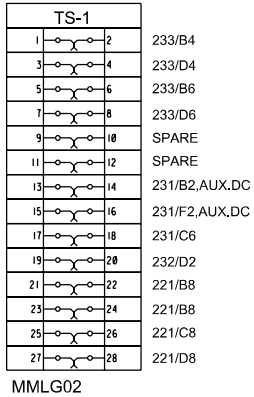

AS-BUILT BY _____ DATE _____	CONTRACT NO. 11131113/00	JOB ORDER NO. S-13656

REV. NO.	DATE	DESCRIPTION
01	13 49	FACTORY ASBUILT
00	13 05	FOR APPROVAL

DRAWN BY RIZ CHECKED BY KVR
DATE STARTED 30.01.2013 DATE COMPLETED _____
OPRG. DEPT. CTPD ENG. DEPT. AUT-PSAC

87B+50BF-2/BU-D02 INTERNAL DIAGRAM
132KV BUSBAR PROTN.MAIN-2 BU PANEL +BBP2-5
S/S 8709 - 132/13.8KV IN AL-KHARJ CITY
RIYADH SAUDI ARABIA

الشركة الوطنية لنقل الكهرباء
نقل الكهرباء
National Grid SA

INDEX	PLANT NO.	DRAWING NUMBER	SHEET NO. SHT	SHEET NO. CONT.	REV. NO.
-	C421	CD-323009	293	294	01

NG/D2-D (2012/01)
DMS VECTOR NGD200

THIS DRAWING AND THE INFORMATION CONTAINED HEREIN ARE THE SOLE PROPERTY OF NationalGrid SA NO REPRODUCTION IN FULL OR IN PART SHALL BE OBTAINED FROM THIS DOCUMENT WITHOUT THE WRITTEN CONSENT OF ITS OWNER.

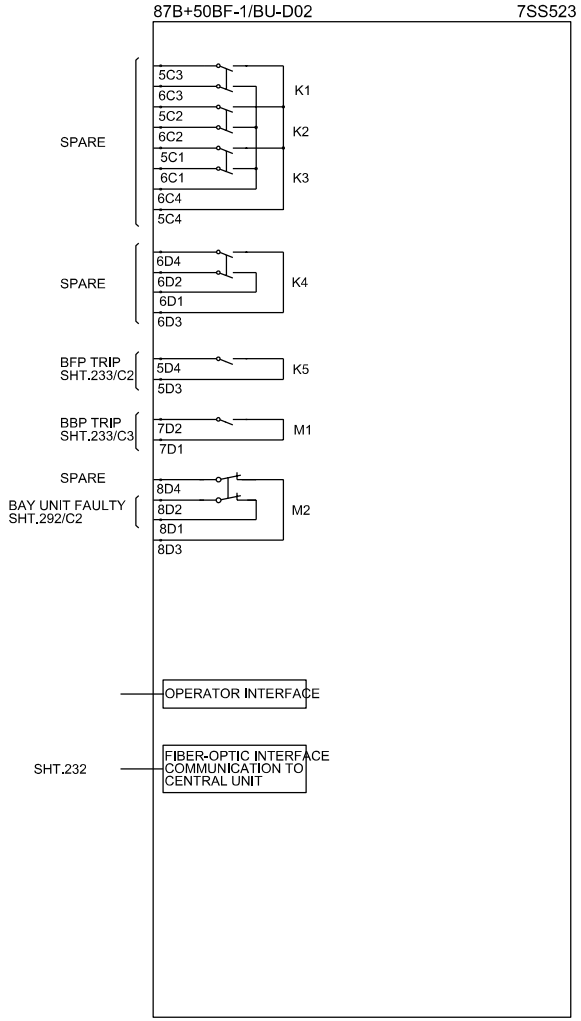

AS-BUILT BY _____ DATE _____

CONTRACT NO. 11131113/00

JOB ORDER NO. S-13656

REV. NO.	DATE	DESCRIPTION
01	13 49	FACTORY ASBUILT
00	13 05	FOR APPROVAL

DRAWN BY RIZ CHECKED BY KVR

DATE STARTED 30.01.2013 DATE COMPLETED _____

OPRG. DEPT. CTPD ENG. DEPT. AUT-PSAC

87B+50BF-2/BU-D02 INTERNAL DIAGRAM

132KV BUSBAR PROTN.MAIN-2 BU PANEL +BBP2-5

S/S 8709 - 132/13.8KV IN AL-KHARJ CITY

RIYADH SAUDI ARABIA

الشركة الوطنية لنقل الكهرباء

نقل الكهرباء National Grid SA

INDEX	PLANT NO.	DRAWING NUMBER	SHEET NO. SHT	SHEET NO. CONT.	REV. NO.
-	C421	CD-323009	294	295	01

NG/D2-D (2012/01)

DMS VECTOR NGD200

THIS DRAWING AND THE INFORMATION CONTAINED HEREIN ARE THE SOLE PROPERTY OF NationalGrid SA NO REPRODUCTION IN FULL OR IN PART SHALL BE OBTAINED FROM THIS DOCUMENT WITHOUT THE WRITTEN CONSENT OF ITS OWNER.

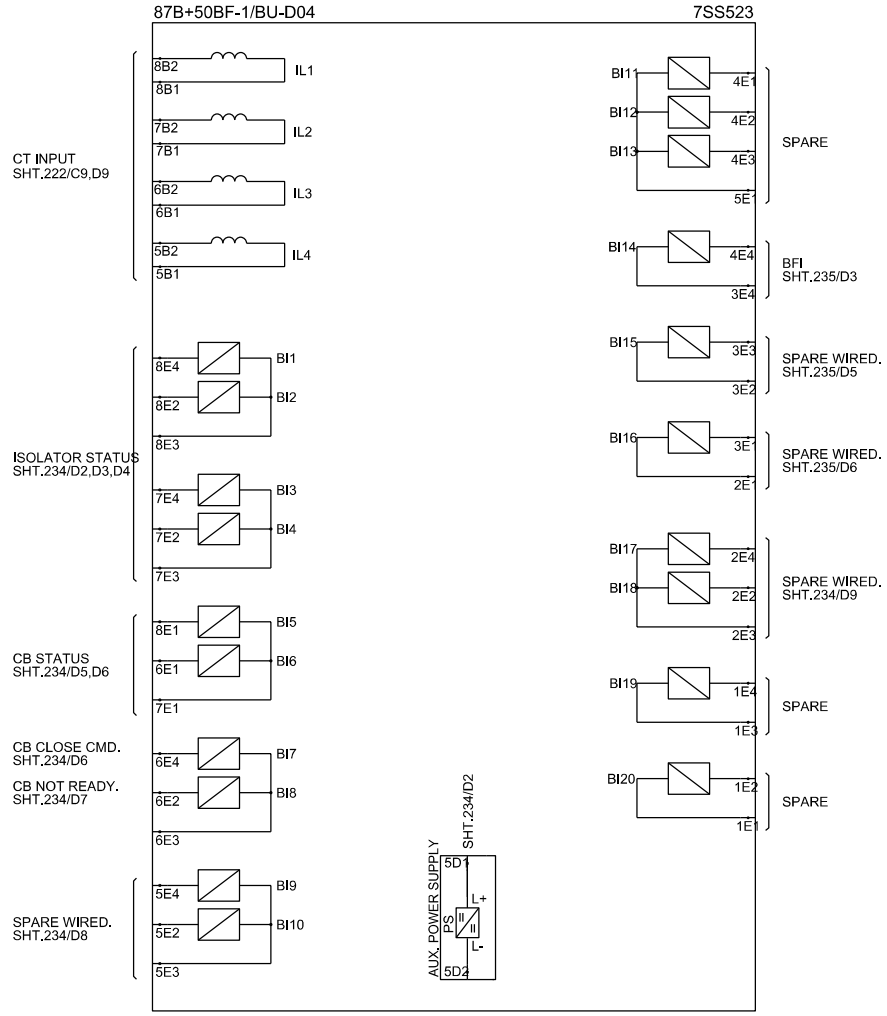

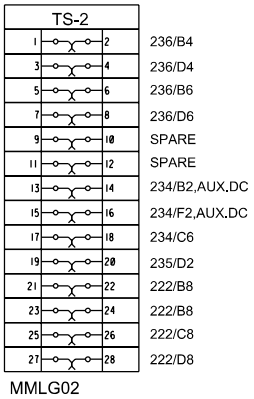

AS-BUILT BY _____ DATE _____	CONTRACT NO. 11131113/00	JOB ORDER NO. S-13656

REV. NO.	DATE	DESCRIPTION
01	13 49	FACTORY ASBUILT
00	13 05	FOR APPROVAL

DRAWN BY RIZ CHECKED BY KVR
DATE STARTED 30.01.2013 DATE COMPLETED _____
OPRG. DEPT. CTPD ENG. DEPT. AUT-PSAC

87B+50BF-2/BU-D04 INTERNAL DIAGRAM
132KV BUSBAR PROTN.MAIN-2 BU PANEL +BBP2-5
S/S 8709 - 132/13.8KV IN AL-KHARJ CITY
RIYADH SAUDI ARABIA

الشركة الوطنية لنقل الكهرباء
نقل الكهرباء
National Grid SA

INDEX	PLANT NO.	DRAWING NUMBER	SHEET NO. SHT	SHEET NO. CONT.	REV. NO.
-	C421	CD-323009	295	296	01

NG/D2-D (2012/01)
DMS VECTOR NGD200

THIS DRAWING AND THE INFORMATION CONTAINED HEREIN ARE THE SOLE PROPERTY OF NationalGrid SA NO REPRODUCTION IN FULL OR IN PART SHALL BE OBTAINED FROM THIS DOCUMENT WITHOUT THE WRITTEN CONSENT OF ITS OWNER.

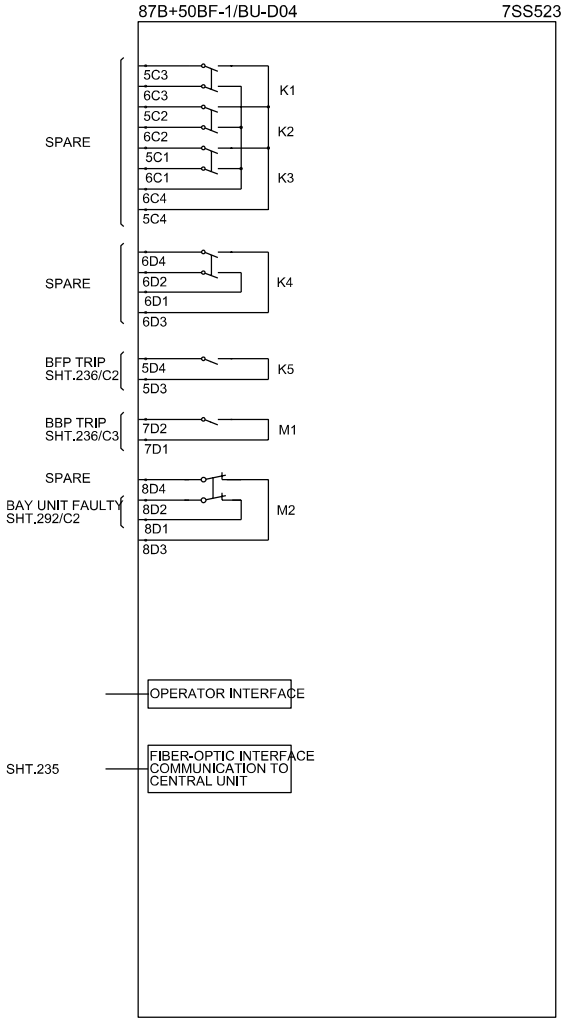

REV. NO.	DATE	DESCRIPTION
01	13 49	FACTORY ASBUILT
00	13 05	FOR APPROVAL

AS-BUILT BY _____ DATE _____

CONTRACT NO. 11131113/00 | JOB ORDER NO. S-13656

DRAWN BY RIZ CHECKED BY KVR

DATE STARTED 30.01.2013 DATE COMPLETED _____

OPRG. DEPT. CTPD ENG. DEPT. AUT-PSAC

87B+50BF-2/BU-D04 INTERNAL DIAGRAM

132KV BUSBAR PROTN.MAIN-2 BU PANEL +BBP2-5

S/S 8709 - 132/13.8KV IN AL-KHARJ CITY

RIYADH SAUDI ARABIA

الشركة الوطنية لنقل الكهرباء

نقل الكهرباء National Grid SA

INDEX	PLANT NO.	DRAWING NUMBER	SHEET NO. SHT	SHEET NO. CONT.	REV. NO.
-	C421	CD-323009	236	297	01

NG/D2-D (2012/01)

DMS VECTOR NGD200

THIS DRAWING AND THE INFORMATION CONTAINED HEREIN ARE THE SOLE PROPERTY OF NationalGrid SA NO REPRODUCTION IN FULL OR IN PART SHALL BE OBTAINED FROM THIS DOCUMENT WITHOUT THE WRITTEN CONSENT OF ITS OWNER.

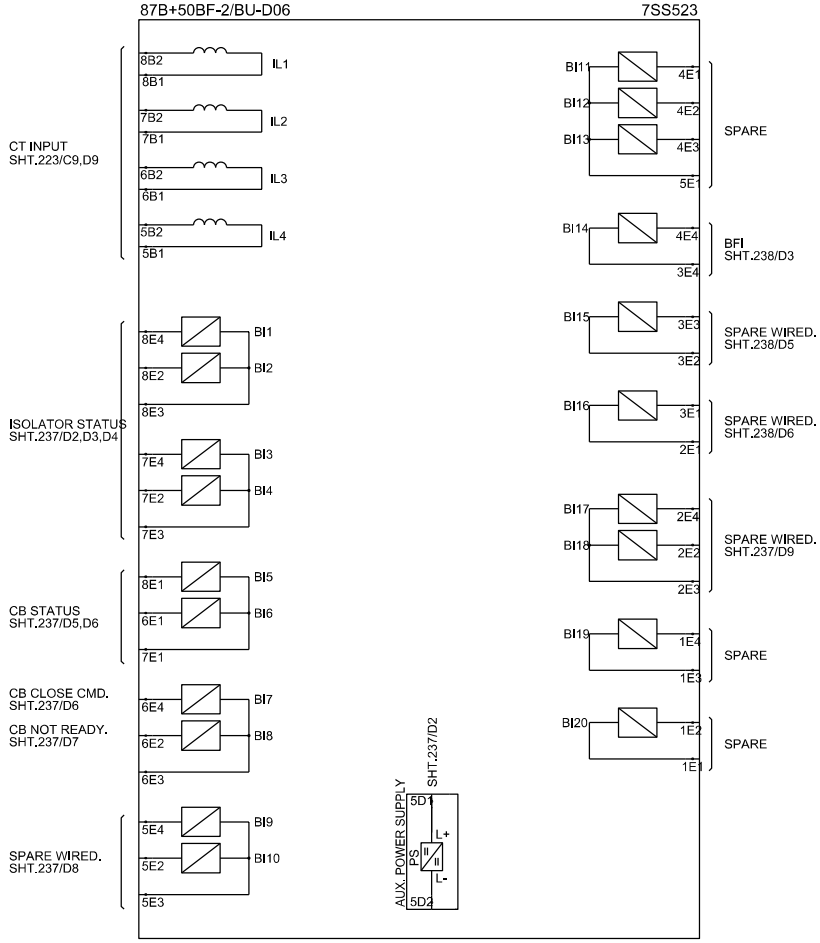

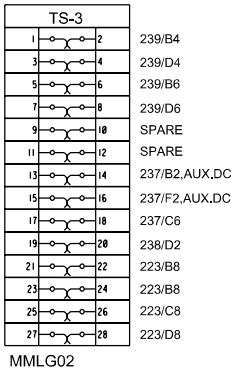

REV. NO.	DATE	DESCRIPTION
01	13 49	FACTORY ASBUILT
00	13 05	FOR APPROVAL

AS-BUILT BY _____ DATE _____

CONTRACT NO. 11131113/00

JOB ORDER NO. S-13656

DRAWN BY RIZ CHECKED BY KVR

DATE STARTED 30.01.2013 DATE COMPLETED _____

OPRG. DEPT. CTPD ENG. DEPT. AUT-PSAC

87B+50BF-2/BU-D06 INTERNAL DIAGRAM

132KV BUSBAR PROTN.MAIN-2 BU PANEL +BBP2-5

S/S 8709 - 132/13.8KV IN AL-KHARJ CITY

RIYADH SAUDI ARABIA

الشركة الوطنية لنقل الكهرباء

نقل الكهرباء National Grid SA

INDEX	PLANT NO.	DRAWING NUMBER	SHEET NO. SHT	SHEET NO. CONT.	REV. NO.
-	C421	CD-323009	297	298	01

NG/D2-D (2012/01)

DMS VECTOR NGD200

THIS DRAWING AND THE INFORMATION CONTAINED HEREIN ARE THE SOLE PROPERTY OF NationalGrid SA NO REPRODUCTION IN FULL OR IN PART SHALL BE OBTAINED FROM THIS DOCUMENT WITHOUT THE WRITTEN CONSENT OF ITS OWNER.

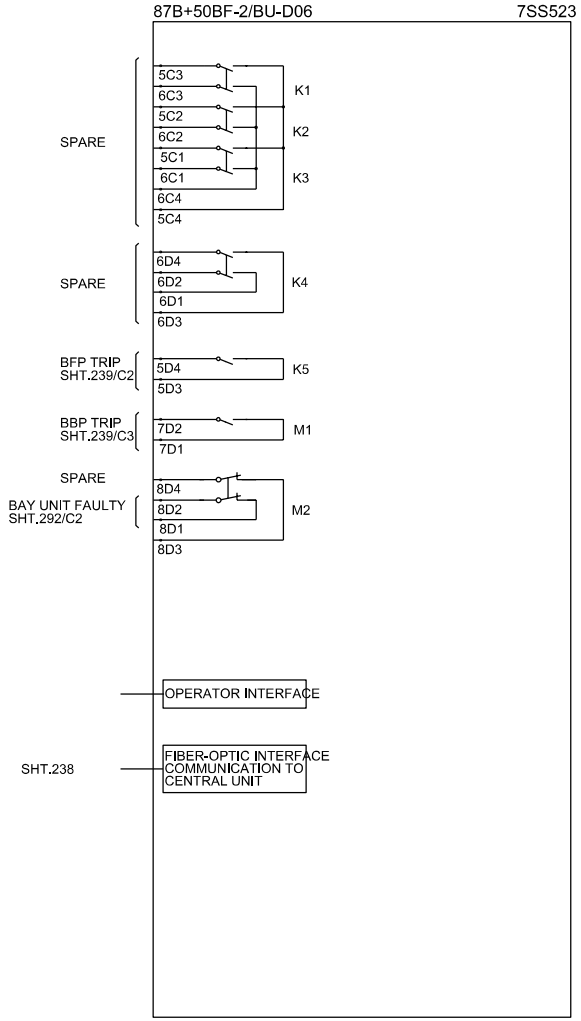

AS-BUILT BY _____ DATE _____

REV. NO.	DATE	DESCRIPTION
01	13 49	FACTORY ASBUILT
00	13 05	FOR APPROVAL

CONTRACT NO. 11131113/00

JOB ORDER NO. S-13656

DRAWN BY RIZ CHECKED BY KVR

DATE STARTED 30.01.2013 DATE COMPLETED _____

OPRG. DEPT. CTPD ENG. DEPT. AUT-PSAC

87B+50BF-2/BU-D06 INTERNAL DIAGRAM

132KV BUSBAR PROTN.MAIN-2 BU PANEL +BBP2-5

S/S 8709 - 132/13.8KV IN AL-KHARJ CITY

RIYADH SAUDI ARABIA

الشركة الوطنية لنقل الكهرباء

نقل الكهرباء National Grid SA

INDEX	PLANT NO.	DRAWING NUMBER	SHEET NO. SHT	SHEET NO. CONT.	REV. NO.
-	C421	CD-323009	298	301	01

NG/D2-D (2012/01)

DMS VECTOR NGD200

THIS DRAWING AND THE INFORMATION CONTAINED HEREIN ARE THE SOLE PROPERTY OF NationalGrid SA NO REPRODUCTION IN FULL OR IN PART SHALL BE OBTAINED FROM THIS DOCUMENT WITHOUT THE WRITTEN CONSENT OF ITS OWNER.

REFERENCE	1X1 CT CKT.
221/B7	1
221/B7	2
221/C7	3
221/C7	4
221/C7	5
221/C7	6
221/C7	7
221/D7	8
221/D7	9
SPARE	10

REFERENCE	2X1 CT CKT.
222/B7	1
222/B7	2
222/C7	3
222/C7	4
222/C7	5
222/C7	6
222/C7	7
222/D7	8
222/D7	9
SPARE	10

REFERENCE	3X1 CT CKT.
223/B7	1
223/B7	2
223/C7	3
223/C7	4
223/C7	5
223/C7	6
223/C7	7
223/D7	8
223/D7	9
SPARE	10

REFERENCE	1X51 CON & PROTN CKTS.
231/A2	1
231/C2	2
231/C3	3
231/C4	4
231/C4	5
231/C5	6
231/C6	7
231/C6	8
231/A7	9
231/C7	10
231/C8	11
231/C8	12
231/C8	13
231/C9	14
231/A9	15
231/C10	16
232/A2	17
232/A3	18
232/A4	19
232/A5	20
232/C2	21
232/C2	22
SPARE	23
232/C4	24
232/D4	25
232/D4	26
232/A8	27
232/E8	28
232/A8	29
232/E8	30
233/E4	31
233/E4	32
233/E6	33
233/E7	34
SPARE	35
SPARE	36
SPARE	37
SPARE	38
SPARE	39
SPARE	40

REFERENCE	2X51 CON & PROTN CKTS.
234/A2	1
234/C2	2
234/C3	3
234/C4	4
234/C4	5
234/C5	6
234/C6	7
234/C6	8
234/A7	9
234/C7	10
234/C8	11
234/C8	12
234/C8	13
234/C9	14
234/A9	15
234/C10	16
235/A2	17
235/A3	18
235/A4	19
235/A5	20
235/C2	21
235/C2	22
SPARE	23
235/C4	24
235/D4	25
235/D4	26
235/A8	27
235/E8	28
235/A8	29
235/E8	30
236/E4	31
236/E4	32
236/E6	33
236/E7	34
SPARE	35
SPARE	36
SPARE	37
SPARE	38
SPARE	39
SPARE	40

REFERENCE	3X51 CON & PROTN CKTS.
237/A2	1
237/C2	2
237/C3	3
237/C4	4
237/C4	5
237/C5	6
237/C6	7
237/C6	8
237/A7	9
237/C7	10
237/C8	11
237/C8	12
237/C8	13
237/C9	14
237/A9	15
237/C10	16
238/A2	17
238/A3	18
238/A4	19
238/A5	20
238/C2	21
238/C2	22
SPARE	23
238/C4	24
238/D4	25
238/D4	26
238/A8	27
238/E8	28
238/A8	29
238/E8	30
239/E4	31
239/E4	32
239/E6	33
239/E7	34
SPARE	35
SPARE	36
SPARE	37
SPARE	38
SPARE	39
SPARE	40

REFERENCE	X61 ALM. CKT.
212/E5	1
212/E5	2
292/E3	3
292/E4	4
292/E6	5
292/E7	6
292/E8	7
292/E8	8
292/E9	9
SPARE	10
SPARE	11
SPARE	12
SPARE	13
SPARE	14
SPARE	15

REFERENCE	X4 DC CKTS.
216/B3	1
216/B3	2
216/D3	3
216/D3	4
SPARE	5
SPARE	6
SPARE	7
SPARE	8
SPARE	9
SPARE	10

REFERENCE	X3 AC CKT.
211/A3	1
211/A7	2
211/A3	3
211/A7	4
211/B3	5
211/B7	6
211/B3	7
211/B7	8
SPARE	9
SPARE	10

REFERENCE	XTJ T.JACK
211/C3	1
211/D3	2
211/D3	3
211/D3	4
SPARE	5

REFERENCE	XSH SPACE HEATER
211/E6	1
211/F6	2
SPARE	3

REFERENCE	X6 ALM. CKT.
212/C5	1
212/C5	2
292/E2	3
SPARE	4
SPARE	5

AS-BUILT BY _____ DATE _____ | CONTRACT NO. 11131113/00 | JOB ORDER NO. S-13656

REV. NO.	DATE	DESCRIPTION
01	13 49	FACTORY ASBUILT
00	13 05	FOR APPROVAL

DRAWN BY RIZ CHECKED BY KVR
DATE STARTED 30.01.2013 DATE COMPLETED _____
OPRG. DEPT. CTPD ENG. DEPT. AUT-PSAC

TERMINAL BLOCKS +BB2-5
132KV BUSBAR PROTN.MAIN-2 BU PANEL +BBP2-5
S/S 8709 - 132/13.8KV IN AL-KHARJ CITY
RIYADH SAUDI ARABIA

الشركة الوطنية لنقل الكهرباء
نقل الكهرباء
National Grid SA

INDEX	PLANT NO.	DRAWING NUMBER	SHEET NO. SHT	SHEET NO. CONT.	REV. NO.
-	C421	CD-323009	301	NIL	01

NG/D2-D (2012/01)
DMS VECTOR NGD200

THIS DRAWING AND THE INFORMATION CONTAINED HEREIN ARE THE SOLE PROPERTY OF NationalGrid SA NO REPRODUCTION IN FULL OR IN PART SHALL BE OBTAINED FROM THIS DOCUMENT WITHOUT THE WRITTEN CONSENT OF ITS OWNER.